Level | Pressure | Flow | Temperature | Liquid Analysis | Registration | Systems Components | Services | Solutions

Technical Information

Cerabar M PMC41/45, PMP41/45/46/48

Process pressure measurement
Pressure transmitter with ceramic and metal sensors
Overload-resistant and function-monitored
With Analog, HART or PROFIBUS PA Electronics

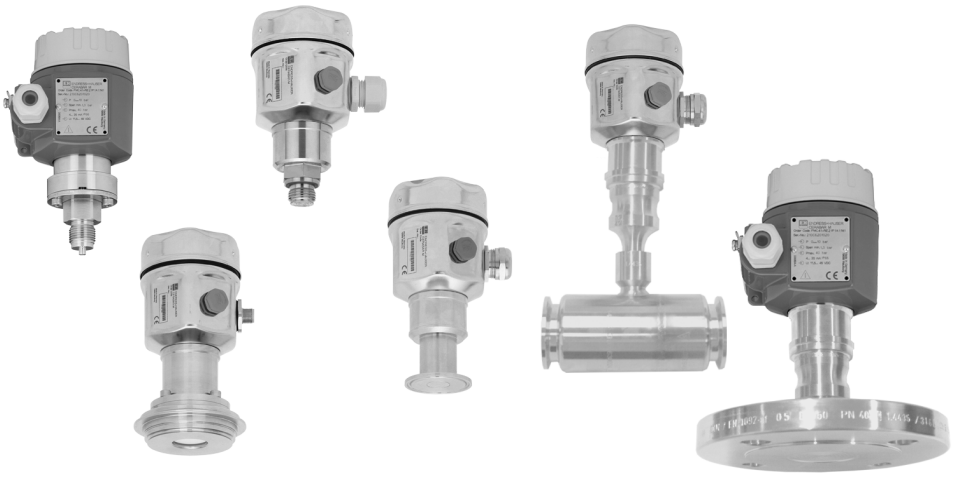

Application

The Cerabar M pressure transmitters measure overpressure and absolute pressure in gases, steam, liquids and dusts. Thanks to the modular instrument concept, Cerabar M suits all areas of process engineering. All hygienic connections, threaded connections and flanges (also as diaphragm seals) are available as process connections.

Your benefits

- Performance characteristics
  - Reference accuracy better than 0.2% of the set measuring range (optional: non-linearity better than 0.1%)
  - Configurable measuring range up to TD 10:1
  - Long-term stability better than 0.25 % / 3 years
- Deployed for pressure monitoring up to SIL 2 as per IEC 61508/IEC 61511-1
- Sensors
  - Dry capacitance ceramic sensor (Ceraphire®) for measuring ranges up to 40 bar - overload-resistant, vacuum-proof, stable against alternating load
  - Piezoresistive sensor with metal diaphragm for measuring ranges up to 400 bar
- Output signals: 4 to 20 mA, 4 to 20 mA with HART, PROFIBUS PA
- Housing
  With its stainless steel housing with no dead space, Cerabar M meets the hygienic requirements of the food and pharmaceutical industries.
  The coated aluminum housing has already stood the test of time in the process industry.
- Device versions compliant with ASME-BPE

TI399P/00/en/06.08
71064497

Endress+Hauser

People for Process Automation

Table of contents

Function and system design 4
Device selection 4
Overview of diaphragm seals for PMP46 5
Overview of diaphragm seals for PMP48 6
Measuring principle 7
Communication protocol 8

Human interface 9
Onsite display (optional) 9
Operating elements 10
Onsite operation 10
Handheld terminals – HART 10
FieldCare – HART, PROFIBUS PA 11
Commuwin II – HART, PROFIBUS PA 11

Input 12
Measured variable 12
Measuring range 12
Explanation of terms 14

Output 15
Output signal 15
Signal range 15
Signal on alarm 15
Load – 4 to 20 mA and
4 to 20 mA HART 15
Resolution 15
Dead time, time constant (T63) 16
Dynamic behavior 4...20 mA (Analog electronic) 16
Dynamic behavior current output (HART electronic) 16
Dynamic behavior digital output (HART electronic) 16
Dynamic behavior PROFIBUS PA 17
Damping 17

Power supply 18
Electrical connection 18
Supply voltage 20
Current consumption 20
Cable entry 20
Cable specification 20
Residual ripple 20

Performance characteristics – general 21
Reference operating conditions 21
Reference accuracy 21
Uncertainty of measurement for small absolute pressure measuring
ranges 21
Long-term stability 21
Influence of the orientation 21
Raising and lowering the zero point 21
Vibrations effects 22
Warm-up period 22
Rise time (T90) 22
Settling time 22

Performance characteristics – ceramic diaphragm . . 23
Reference accuracy 23
Thermal change of the zero output and the output span 23
Temperature coefficient (TK) for zero output and output span . . . 23

Performance characteristics – metal diaphragm 24
Reference accuracy 24
Thermal change of the zero output and the output span 24
Temperature coefficient (TK) for zero output and output span . . . 24

Operating conditions (installation) 25
General installation instructions 25
Measuring arrangement for devices without a diaphragm seal –
PMC41, PMC45, PMP41, PMP45 25
Mounting with temperature isolator 25
Wall and pipe-mounting 26
Oxygen applications 27
PWIS-free applications 27
Ultrapure gas applications 27

Operating conditions (environment) 28
Ambient temperature limits 28
Storage temperature range 28
Degree of protection 28
Climate class 28
Electromagnetic compatibility 28

Operating conditions (process) 29
Process temperature limits 29
Temperature operating range, seals 29
Pressure specifications 30

Mechanical construction 31
Dimensions of stainless steel housing 31
Dimensions of aluminum housing 31
General Note on flanges 31
Process connections PMC41
(with ceramic measuring diaphragm) 31
Process connections PMC45
(with ceramic measuring diaphragm) 33
Process connections PMP41 (with metal measuring diaphragm) . 41
Process connections PMP45 (with metal measuring diaphragm) . 43
Process connections PMP46 (with metal measuring diaphragm) . 45
Process connections PMP48 (with metal measuring diaphragm) . 51
Weight 58
Material 58

Planning instructions for diaphragm seal systems . . . 59
Applications 59
Planning instructions 59
Diaphragm seal filling oils 60
Influence of the temperature on the zero point 61
Ambient temperature range 65
Installation instructions 65

Certificates and approvals 66
CE mark 66
Ex approvals 66

Suitability for hygienic processes 66
CRN approval 66
Pressure Equipment Directive (PED) 66
Functional safety SIL 2/
IEC 61508/IEC 61511-1 66
Standards and guidelines 66

Ordering information 67
PMC41 67
PMC45 69
PMP41 72
PMP45 74
PMP46 76
PMP48 79

Additional Documentation. 82
Field of Activities 82
Technical Information 82
Operating Instructions 82
Functional Safety Manual (SIL) 82
Safety conventions and icons 82
Installation/Control Drawings 82

Function and system design

Device selection

Cerabar M – product family	PMC41	PMC45	PMP41	PMP45	PMP46	PMP48
	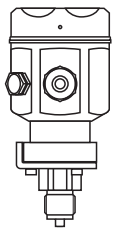 P01-PMC41xxx-16-xx-xx-xx-000	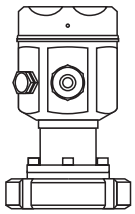 P01-PMC45xxx-16-xx-xx-xx-000	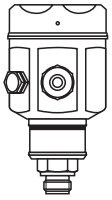 P01-PMP41xxx-16-xx-xx-xx-000	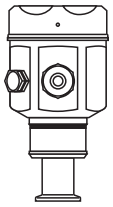 P01-PMP45xxx-16-xx-xx-xx-000	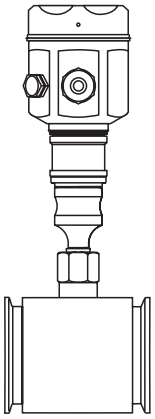 P01-PMP46xxx-16-xx-xx-xx-000	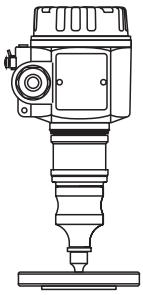 P01-PMP48xxx-16-xx-xx-xx-000
	With capacitance measuring cell and ceramic measuring diaphragm (Ceraphire®)		**With piezoresistive measuring cell and metal measuring diaphragm**		**With piezoresistive measuring cell, and diaphragm seal**	
Field of application	Absolute pressure and overpressure					
Process connections	Threaded connections	Flush-mounted hygienic connections	Threaded connections	Flush-mounted hygienic connections	Hygiene diaphragm seal, diaphragm seals compliant with ASME-BPE → see following section "Overview of PMP46 diaphragm seals"	Flange diaphragm seal, separator with threaded connection → see following section "Overview of PMP48 diaphragm seals"
Measuring ranges	Up to 40 bar		Up to 400 bar			
Overpressure limit (OPL) [1]	Max. 60 bar		Max. 600 bar			
Process temperature range	–40 to +100°C (–40 to +212°F)	–40 to +125°C (–40 to +257°F), +150°C (+302°F) for 1 h	–40 to +100°C (–40 to +212°F)	–40 to +125°C (–40 to +257°F), +150°C (+302°F) for 1 h	-70 to +400°C (–40 to +212°F)	
Ambient temperature range	40 to +85°C (–40 to +185°F)					
Maximum measured error	– ±0.2% of set span – Optional: non-linearity ±0.1% of set span				±0.2% of set span	
Supply voltage	– For non-hazardous areas: 11.5 to 45 V DC – EEx ia: 11.5 to 30 V DC					
Output	4 to 20 mA, 4 to 20 mA with superimposed HART protocol, PROFIBUS PA					
Options	– 3.1 Inspection certificate – Materials compliant with FDA – Mounting bracket	– 3.1 Inspection certificate – Materials compliant with FDA	– 3.1 Inspection certificate – Materials compliant with FDA – Mounting bracket	– 3.1 Inspection certificate – Materials compliant with FDA	– 3.1 Inspection certificate – Materials compliant with FDA – Temperature isolator – Electropolished surface – Mounting bracket	
Specialties	– Flexibility thanks to modular design – Large selection of approvals, including ATEX, FM and CSA – Wide range of cable entries, cable glands and connectors – Choice of robust housing made of stainless steel (AISI 316L) or coated aluminum housing for strict hygienic requirements – Electropolished wetted surfaces – Dry ceramic cell (without fill fluid), resistant to abrasion and corrosion, compliant with FDA: Ceraphire® – Special cleaning of the transmitter to remove paint-wetting impairment substances, for use in paint shops					

1) Depends on the element of the selected components which has the lowest pressure rating

Overview of diaphragm seals for PMP46

Design	Diaphragm seal	Connection	Version	Standard	Nominal diameter	Nominal pressure/ Class
Hygienic version	Membrane diaphragm seal (MDM)	Nozzle with coupling nut	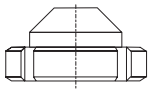 P01-PMP46xxx-03-xx-xx-xx-000	DIN 11851	– DN 32 – DN 40 – DN 50	– PN 40 – PN 40 – PN 25
			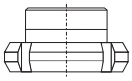 P01-PMP46xxx-03-xx-xx-xx-001	SMS	– 1 1/2" – 2"	PN 25
			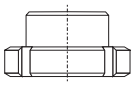 P01-PMP46xxx-03-xx-xx-xx-002	RJT	– 1 1/2" – 2"	PN 40
			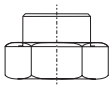 P01-PMP46xxx-03-xx-xx-xx-003	ISS	– 1 1/2" – 2"	PN 40
		Varivent	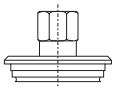 P01-PMP46xxx-03-xx-xx-xx-004		– Type F for pipes DN 25 – DN 32 – Type N for pipes DN 40 – DN 162	PN 40
		Clamp	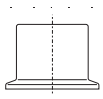 P01-PMP46xxx-03-xx-xx-xx-005	ISO 2852	– DN 25 (1") – DN 38 (1 1/2") – DN 51 (2") – DN 76.1 (3")	Dependent on the clamp used
		DRD	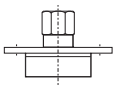 P01-PMP46xxx-03-xx-xx-xx-006		DN50 (65 mm)	PN 25
	Pipe diaphragm seal (RDM)	Threaded adapter	P01-PMP46xxx-03-xx-xx-xx-007	DIN 11851	– DN 25	PN 40
					– DN 40	PN 40
					– DN 50	PN 25
		Clamp	P01-PMP46xxx-03-xx-xx-xx-008	ISO 2852	– DN 10 (3/4") – DN 16 (3/4") – DN 25 (1") – DN 38 (1 1/2") – DN 51 (2")	Dependent on the clamp used
Versions compliant with ASME-BPE for use in biotechnical processes; wetted surfaces $R_a \leq 0.4$ *m (15.75 *in; 180 grit), electropolished	Membrane diaphragm seal (MDM)	Clamp	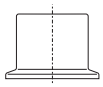 P01-PMP46xxx-03-xx-xx-xx-005	ISO 2852	– DN 38 (1 1/2") – DN 51 (2")	Dependent on the clamp used
		Varivent	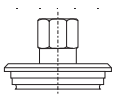 P01-PMP46xxx-03-xx-xx-xx-004		– Type N for pipes DN 40 – DN 162	PN 40

Overview of diaphragm seals for PMP48

Design	Diaphragm seal	Connection	Version	Standard	Nominal diameter	Nominal pressure/ Class
Threaded connection	Membrane diaphragm seal (MDM)	G	P01-PMP48xxx-03-xx-xx-xx-000	DIN ISO 228/1	– G 1 A – G 1 1/2 A – G 2 A	Up to 400 bar
		NPT	P01-PMP48xxx-03-xx-xx-xx-001	ANSI B1.20.1	– 1 NPT – 1 1/2 NPT – 2 NPT	
Threaded connection with separator		G	P01-PMP48xxx-03-xx-xx-xx-002	ISO 228/ EN 837	G 1/2	Up to 160 bar
		NPT	P01-PMP48xxx-03-xx-xx-xx-003	ANSI B1.20.1	1/2 NPT	
flange		EN/DIN flange	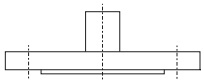 P01-PMP48xxx-03-xx-xx-xx-004	EN 1092-1/ DIN 2527 and DIN 2501-1	– DN 25 – DN 50 – DN 80	– Up to PN 400 – Up to PN 400 – Up to PN 40
		ANSI flange		ANSI B.16.5	– 1" – 2" – 3" – 4"	– Up to 2500 lbs – Up to 2500 lbs – Up to 300 lbs – Up to 300 lbs
		JIS flange		B 2220	– 25 A – 50 A – 80 A	Up to 10 K
Flange with extended diaphragm seal		EN/DIN flange	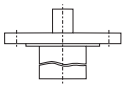 P01-PMP48xxx-03-xx-xx-xx-005	EN 1092-1/ DIN 2527	– DN 50 – DN 80	Up to PN 40
		ANSI flange		ANSI B.16.5	– 2" – 3" – 4"	Up to 150 lbs

Measuring principle

Ceramic measuring diaphragm used for PMC41 and PMC45 (Ceraphire®)

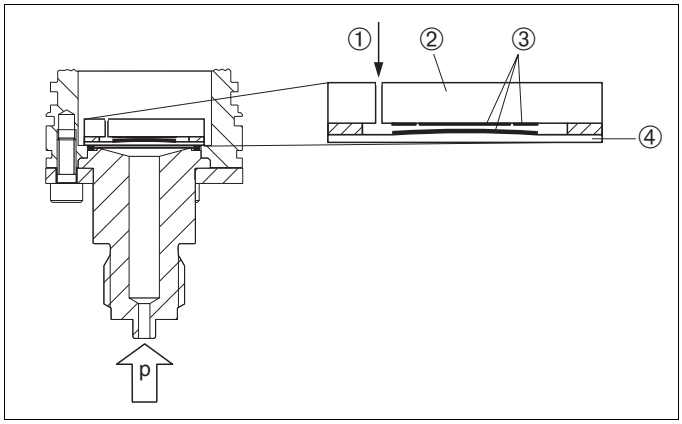

Ceramic sensor

① *Air pressure (overpressure sensors)*
② *Ceramic carrier*
③ *Electrodes*
④ *Ceramic diaphragm*

Metal measuring diaphragm used in PMP41, PMP45, PMP46 and PMP48

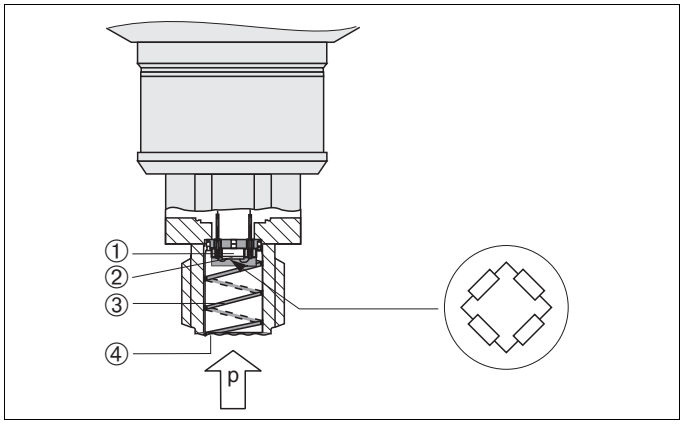

Metal sensor

① *Silicon measuring element, carrier*
② *Measuring diaphragm with Wheatstone bridge*
③ *Channel with fill fluid*
④ *Flush-mounted metal diaphragm*

Ceramic measuring diaphragm used for PMC41 and PMC45 (Ceraphire®)

The ceramic sensor is a dry sensor, i.e. the process pressure acts directly on the robust ceramic diaphragm and deflects it. A pressure-dependent change in capacitance is measured at the electrodes of the ceramic carrier and the diaphragm. The measuring range is determined by the thickness of the ceramic diaphragm.

Advantages:
- Guaranteed overload resistance up to 40 times the nominal pressure (max. 60 bar)
- Thanks to 99.9% high-purity ceramic (Ceraphire®, → see also www.endress.com/ceraphire)
  - Extremely high chemical stability
  - Less relaxation
  - High mechanical stability
- Suitable for vacuums
- Very suitable for hygienic processes as the ceramic material Al_2O_3 is safe and not harmful to health (FDA 21CFR186.1256, USP Class VI)

Metal measuring diaphragm used for PMP41, PMP45, PMP46 and PMP48

PMP41 and PMP45

The operating pressure deflects the separating diaphragm and a fill fluid transfers the pressure to a resistance measuring bridge (semiconductor technology). The pressure-dependent change in the bridge output voltage is measured and processed further.

Advantages:
- Can be used with process pressures up to 400 bar
- High long-term stability
- Guaranteed overload resistance up to 4 times the nominal pressure (max. 600 bar)
- Compact solution even for small hygienic connections

PMP46 and PMP48

The operating pressure acts on the diaphragm of the diaphragm seal and is transferred to the separating diaphragm of the sensor by a diaphragm seal fill fluid. The separating diaphragm is deflected and a fill fluid transfers the pressure to a resistance measuring bridge. The pressure-dependent change in the bridge output voltage is measured and processed further.

Advantages:
- Can be used with process pressures up to 400 bar
- High long-term stability
- Guaranteed overload resistance up to 4 times the nominal pressure (max. 600 bar)

Communication protocol

- 4 to 20 mA without communication protocol
- 4 to 20 mA with HART communication protocol
- PROFIBUS PA
  - The Endress+Hauser devices meet the FISCO model requirements.
  - Due to the low current consumption of 11 mA ±1 mA the following can be operated at one bus segment when installing to FISCO:
    - Up to 9 Cerabar M for EEx ia, CSA IS and FM IS applications
    - Up to 32 Cerabar M for all other applications, e.g. in non-hazardous areas, EEx nA, etc.

  Further information on PROFIBUS PA can be found in Operating Instructions BA034S "PROFIBUS DP/PA: Guidelines for planning and commissioning" and in the PNO Guidelines (Profibus User Organization).

Human interface

Onsite display (optional)

Analog display for devices with analog electronics

A plug-in liquid crystal display (LCD), with a bar graph for showing the current (30 segments), is used as the display unit. The display can be rotated in 90° stages.

Functions:
- Bar graph to indicate the measured value from 0 to 100%. This corresponds to a signal current of 4 to 20 mA.
- The scale flashes to indicate signal undershoot (current < 3.8 mA).
- The bar graph and scale flash to indicate signal overshoot (current > 20.5 mA).

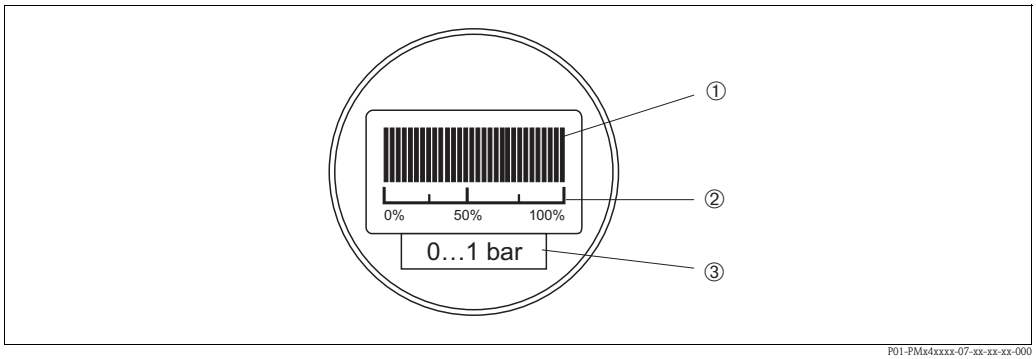

Onsite display for devices with analog electronics

① *Bar graph*
② *Scale*
③ *Cell measuring range*

Digital display for devices with 4 to 20 mA HART or PROFIBUS PA electronics

A plug-in digital display, with a 4-digit pressure display and bar graph (28 segments), is used as the display unit. The display can be rotated in 90° stages.

Functions:
- 4-digit pressure display
- Bar graph
  - 4 to 20 mA HART: the bar graph displays the current value (4 to 20 mA) belonging to the pressure value.
  - PROFIBUS PA: the bar graph displays the current pressure value in relation to the set measuring range.
- Easy diagnosis by displaying an error code

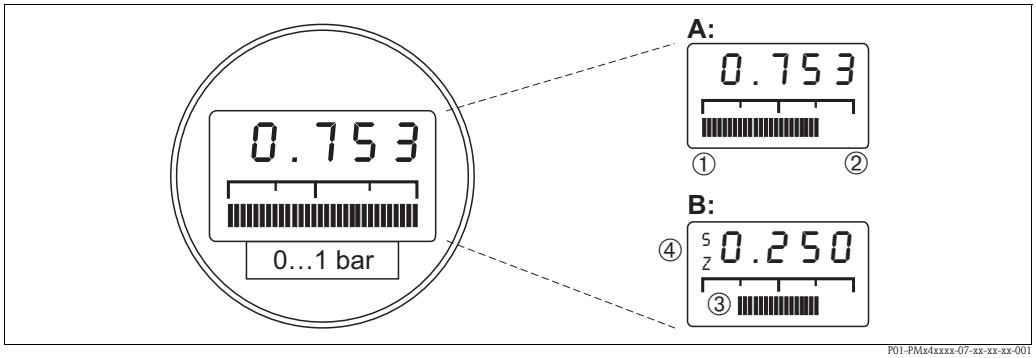

Onsite display for devices with 4 to 20 mA HART or PROFIBUS PA electronics

A *Display in measuring mode*
B *Display in calibration mode*

① *4-digit display of measured values and input parameters*
② *Bar graph, display of current measured value*
③ *Lower-range value*
④ *Upper-range value*
⑤ *Set measuring range in measuring limits*
⑥ *Display of calibration point (Z (Zero) = lower-range value (LRV) or S (Span) = upper-range value (URV))*
⑦ *Nominal measuring range*

Operating elements

The operating elements are located under the optional onsite display on the electronic insert.

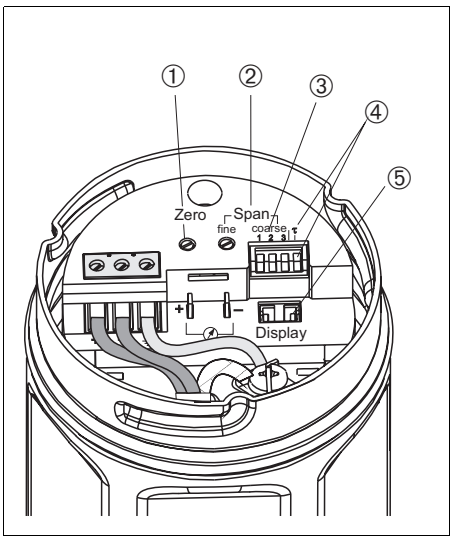

P01-PMx4xxxx-19-xx-xx-xx-000

Analog electronic insert

① *Potentiometer for calibrating the lower-range value (Zero)*
② *Potentiometer for fine adjustment of the span*
③ *DIP switches 1 to 3 for coarse adjustment of the span*
④ *DIP switch for damping on/off*
⑤ *Slot for optional onsite display*

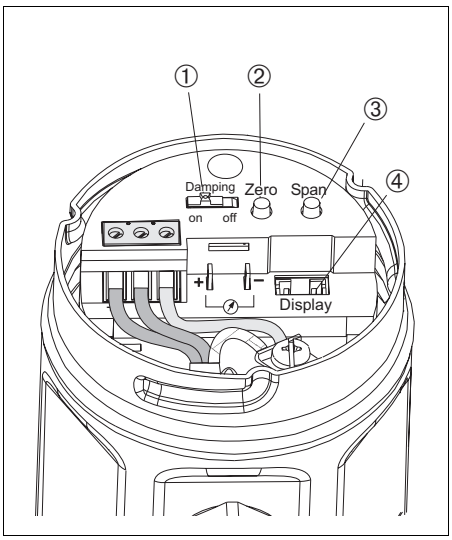

P01-PMx4xxxx-19-xx-xx-xx-001

4 to 20 mA HART electronic insert

① *Switch for damping on/off*
② *Key for calibrating the lower-range value (Zero)*[1]
③ *Key for calibrating the upper-range value (Span)*[2]
④ *Slot for optional onsite display*

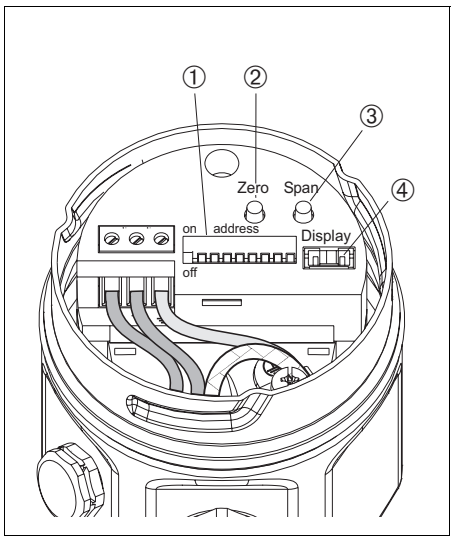

P01-PMx4xxxx-19-xx-xx-xx-002

PROFIBUS PA electronic insert

① *DIP switches for bus address*
② *Key for calibrating the lower-range value (Zero)*[1]
③ *Key for calibrating the upper-range value (Span)*[2]
④ *Slot for optional onsite display*

1) Lower-range value (LRV) = Zero

2) Upper-range value (URV) = Span

Onsite operation

4 to 20 mA functions

- Calibrating the display value (e.g. on the onsite display) to zero
- Setting the lower-range value and upper-range value – reference pressure applied at the device
- Switching damping on and off

4 to 20 mA HART functions

- Calibrating the display value (e.g. on the onsite display) to zero
- Setting the lower-range value and upper-range value – reference pressure applied at the device
- Switching damping on and off
- Performing reset

PROFIBUS PA functions

- Calibrating the display value on the onsite display to zero
- Setting the lower-range value and upper-range value – reference pressure applied at the device
- Setting the bus address of the device

Handheld terminals – HART

With a handheld terminal, all the parameters can be configured anywhere along the 4 to 20 mA line via menu operation.

FieldCare – HART, PROFIBUS PA

FieldCare is Endress+Hauser's plant asset management tool which is based on FDT technology. With FieldCare, you can configure all of Endress+Hauser devices, as well as devices from other manufacturers that support the FDT standard.

FieldCare supports the following functions:
- Configuration of transmitters in offline and online mode
- Loading and saving device data (upload/download)
- Documentation of the measuring point

Connection options:
- HART via Commubox FXA195 and the USB interface of a computer
- PROFIBUS PA via segment coupler and PROFIBUS interface card

For more information, see → www.endress.com.

Commuwin II – HART, PROFIBUS PA

Commuwin II is a graphically supported operating program for intelligent measuring devices with the HART and PROFIBUS PA communication protocols. The following operating systems are supported: Win 3.1/3.11, Win 95, Win 98, WinNT4.0 and Win2000. Commuwin II shows the most important parameters.

Commuwin II supports the following functions:
- Configuration of measuring devices in online mode via matrix operation
- Loading and saving device data (upload/download)
- Visualization of measured values and limit values
- Presentation and recording of measured values with a line recorder

Connection options:
- HART via Commubox FXA191 and the RS 232 C serial interface of a computer
- PROFIBUS PA via segment coupler and PROFIBUS interface card

Input

Measured variable Absolute pressure or overpressure

Measuring range **PMC41 and PMC45 with ceramic measuring diaphragm (Ceraphire®) for overpressure**

Nominal value	Measurement limits		Smallest span that can be calibrated	OPL [1]	MWP [2]	Vacuum resistance	Version in the order code [3]
	lower (LRL) [bar]	upper (URL) [bar]	[bar]	[bar]	[bar]	[bar_{abs}]	
100 mbar	0	0.1	0.01	4	2.7	0.7	1C
400 mbar	0	0.4	0.04	8	5.3	0	1F
1 bar	0	1	0.1	10	6.7	0	1H
4 bar	0	4	0.4	25	16.7	0	1M
10 bar	0	10	1	40	26.7	0	1P
40 bar	0	40	4	60	40	0	1S

PMC41 and PMC45 with ceramic measuring diaphragm (Ceraphire®) for negative overpressure

Nominal value	Measurement limits		Smallest span that can be calibrated	OPL [1]	MWP [2]	Vacuum resistance	Version in the order code [3]
	lower (LRL) [bar]	upper (URL) [bar]	[bar]	[bar]	[bar]	[bar_{abs}]	
100 mbar	–0.1	0.1	0.02	4	2.7	0.7	5C
400 mbar	–0.4	0.4	0.08	8	5.3	0	5F
1 bar	–1	1	0.2	10	6.7	0	5H
4 bar	–1	4	0.5	25	16.7	0	5M
10 bar	–1	10	1.1	40	26.7	0	5P

PMC41 and PMC45 with ceramic measuring diaphragm (Ceraphire®) for absolute pressure

Nominal value	Measurement limits		Smallest span that can be calibrated	OPL [1]	MWP [2]	Vacuum resistance	Version in the order code [3]
	lower (LRL) [bar_{abs}]	upper (URL) [bar_{abs}]	[bar]	[bar_{abs}]	[bar_{abs}]	[bar_{abs}]	
400 mbar	0	0.4	0.04	8	5.3	0	2F
1 bar	0	1	0.1	10	6.7	0	2H
4 bar	0	4	0.4	25	16.7	0	2M
10 bar	0	10	1	40	26.7	0	2P
40 bar	0	40	4	60	40	0	2S

1) OPL: overpressure limit
2) The MWP (maximum working pressure) for the measuring device depends on the element of the selected components which has the lowest pressure rating, i.e. the process connection (→ see Page 31 ff) has to be taken into consideration in addition to the measuring cell (→ see Table above). Please also observe the pressure-temperature dependencies. For the appropriate standards and further information, see Page 30, "Pressure specifications" section.

3) Version in the order code → see also Page 67 ff, feature 30 "Sensor range; MWP, OPL"

PMP41, PMP 45, PMP46 and PMP48 with metal measuring diaphragm for overpressure

Nominal value	Measurement limits		Smallest span that can be calibrated	OPL [1]	MWP [2]	Vacuum resistance [3]	Version in the order code [4]
	lower (LRL) [bar]	upper (URL) [bar]	[bar]	[bar]	[bar]	[bar_{abs}]	
1 bar	0	1	0.1	4	2.7	0.01	3H
4 bar	0	4	0.4	16	10.7	0.01	3M
10 bar	0	10	1	40	26.7	0.01	3P
40 bar	0	40 [5]	4	160	100	0.01	3S
100 bar	0	100 [5]	10	400	100	0.01	3U [6]
400 bar	0	400 [5]	40	600	400	0.01	3S [6]

PMP41, PMP45, PMP46, PMP48 with metal measuring diaphragm for negative overpressure

Nominal value	Measurement limits		Smallest span that can be calibrated	OPL [1]	MWP [2]	Vacuum resistance [3]	Version in the order code [4]
	lower (LRL) [bar]	upper (URL) [bar]	[bar]	[bar]	[bar]	[bar_{abs}]	
1 bar	–1	1	0.2	4	2.7	0.01	7H
4 bar	–1	4	0.5	16	10.7	0.01	7M
10 bar	–1	10	1.1	40	26.7	0.01	7P

PMP41, PMP45, PMP46, PMP48 with metal measuring diaphragm for absolute pressure

Nominal value	Measurement limits		Smallest span that can be calibrated	OPL [1]	MWP [2]	Vacuum resistance [3]	Version in the order code [4]
	lower (LRL) [bar_{abs}]	upper (URL) [bar_{abs}]	[bar]	[bar_{abs}]	[bar_{abs}]	[bar_{abs}]	
1 bar	0	1	0.1	4	2.7	0.01	4H
4 bar	0	4	0.4	16	10.7	0.01	4M
10 bar	0	10	1	40	26.7	0.01	4P
40 bar	0	40	4	160	100	0.01	4S
100 bar	0	100	10	400	100	0.01	4U [6]
400 bar	0	400	40	600	400	0.01	4Z [6]

1) OPL: overpressure limit
2) The MWP (maximum working pressure) for the measuring device depends on the element of the selected components which has the lowest pressure rating, i.e. the process connection (→ see Page 31 ff) has to be taken into consideration in addition to the measuring cell (→ see Table above). Please also observe the pressure-temperature dependencies. For the appropriate standards and further information, see Page 30, "Pressure specifications" section.

3) Observe the pressure and temperature operating limits of the filling oil selected. → See Page 60, "Diaphragm seal filling oils" section.
4) Version in the order code → see also Page 67 ff, feature 30 "Sensor range; MWP, OPL"
5) Absolute pressure sensors
6) Not for PMP46

Explanation of terms

Explanation of terms: turn down (TD), set span and span based on zero point

Case 1:
- |Lower-range value (LRV)| ≤ |upper-range value (URV)|

Example:
- Lower-range value (LRV) = 0 bar
- Upper-range value (URV) = 0.5 bar
- Nominal value (URL) = 1 bar

Turn down:
- Nominal value/|upper-range value (URV)| = 1 bar/0.5 bar
  TD = 2:1

Set span:
- Upper-range value (URV) – lower-range value (LRV) = 0.5 bar – 0 bar
  Set span = 0.5 bar
  This span is based on the zero point.

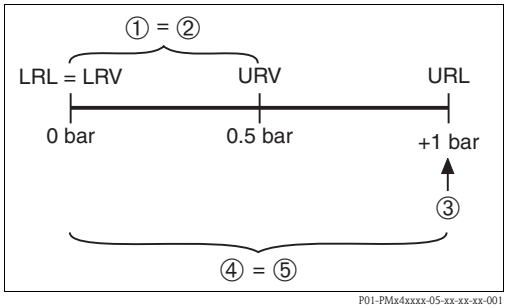

Example: 1 bar measuring cell

Case 2:
- |Lower-range value (LRV)| ≤ |upper-range value (URV)|

Example:
- Lower-range value (LRV) = 0 bar
- Upper-range value (URV) = 0.5 bar
- Nominal value (URL) = 1 bar

Turn down:
- Nominal value/|upper-range value (URV)| = 1 bar/0.5 bar
  TD = 2:1

Set span:
- Upper-range value (URV) – lower-range value (LRV) = 0.5 bar – 0 bar
  Set span = 0.5 bar
  This span is based on the zero point.

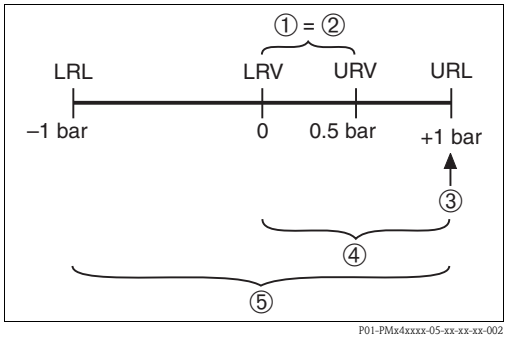

Example: 1 bar measuring cell

Case 3:
- |Lower-range value (LRV)| ≥ |upper-range value (URV)|

Example:
- Lower-range value (LRV) = –0.6 bar
- Upper-range value (URV) = 0 bar
- Nominal value (URL) = 1 bar

Turn down:
- Nominal value/|lower-range value (LRV)| = 1 bar/0.6 bar
  TD 1.67:1

Set span:
- Upper-range value (URV) – lower-range value (LRV) = 0 bar – (–0.6 bar)
  Set span = 0.6 bar
  This span is based on the zero point.

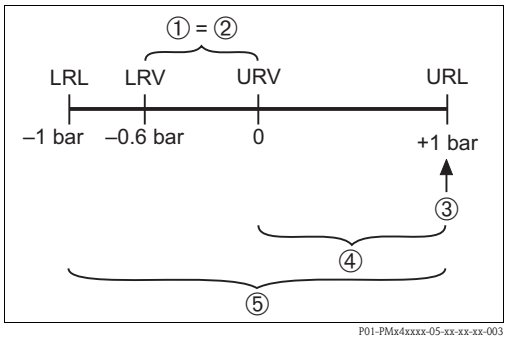

Example: 1 bar measuring cell

① *Set span*
② *Span based on zero point*
③ *Nominal value ≙ upper-range limit (URL)*
④ *Nominal measuring range*
⑤ *Sensor measuring range*
LRL *Lower-range limit*
URL *Upper-range limit*
LRV *Lower-range value*
URV *Upper-range value*

Output

Output signal

- 4 to 20 mA, 2-wire
- 4 to 20 mA with superimposed communication protocol HART, 2-wire
- Digital communication signal PROFIBUS PA (Profile 3.0), 2-wire

Signal range

4 to 20 mA, 4 to 20 mA HART:
- 3.8 to 20.5 mA

Signal on alarm

- 4 to 20 mA:
  – Signal overshoot: > 20.5 mA
  – Signal undershoot: < 3.8 mA
- 4 to 20 mA HART:
  Options:
  – MIN: 3.6 mA
  – MAX: 22 mA (factory setting)
  – Continue: last measured value is kept
- PROFIBUS PA: can be set in the Analog Input Block, options: last good value (factory setting), FSAFE value, wrong value

Load – 4 to 20 mA and 4 to 20 mA HART

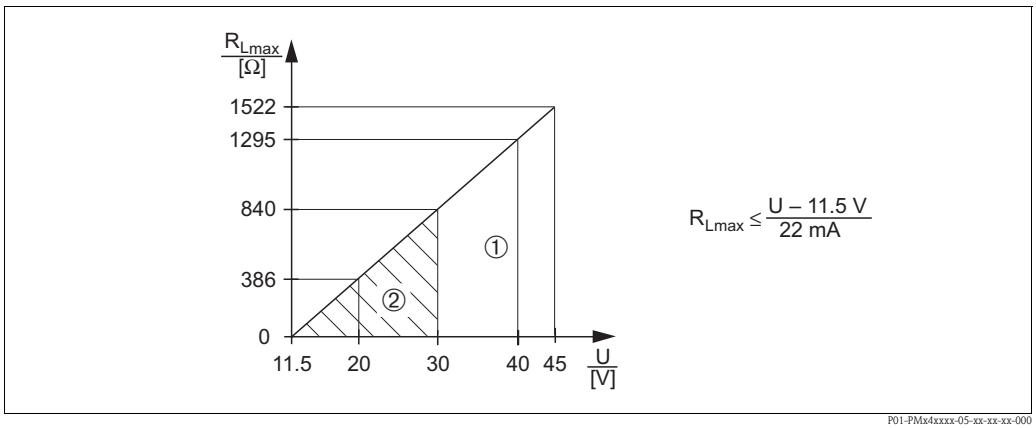

P01-PMx4xxxx-05-xx-xx-xx-000

Load diagram, observe explosion protection.

① *Power supply 11.5 to 45 V DC for devices for non-hazardous areas, 1/3 D, EEx d, EEx nA, FM XP, FM DIP, CSA XP and CSA Dust-Ex*
② *Power supply 11.5 to 30 V DC for EEx ia, 1 D, 1/2 D 1/2G, FM IS and CSA IS*
R_{Lmax} *Maximum load resistance*
U *Supply voltage*

Note!
Devices with 4 to 20 mA HART electronics: when operating via a handheld terminal or via a PC with an operating program, a minimum communication resistance of 250 Ω must be taken into account.

Resolution

- 4 to 20 mA:
  – Current output: < 1 µA
  – Onsite display: 30 segments
- 4 to 20 mA HART:
  – Current output:
    – Typical value: 1 µA
    – Max.: 6 µA
  – Onsite display: 28 segments, numerical value display with 1 per thousand resolution
- PROFIBUS PA:
  – Onsite display: 28 segments, display value with resolution 1 per thousand

Dead time, time constant (T63)

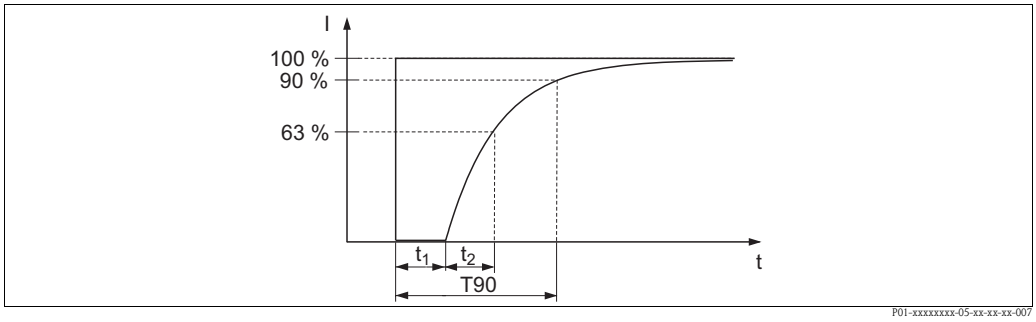

Illustration of dead time and time constant

Dynamic behavior 4...20 mA (Analog electronic)

Dead time, time constant (T63)

Types	Dead time t_1	Time constant (T63), t_2	Step response time (T90)
all	—	40 ms	80 ms
PMP46/PMP48	additional influence from the diaphragm seal		

Dynamic behavior current output (HART electronic)

Types	Dead time t_1	Time constant (T63), t_2
all	290 ms	240 ms
PMP46/PMP48	additional influence from the diaphragm seal	

Dynamic behavior digital output (HART electronic)

Dead time, time constant (T63)

For HART communication, the dead time consists of the internal dead time of the device and the update rate on the bus:

Types	Dead time t_1	Time constant (T63), t_2
all	540 ms	240 ms
PMP46/PMP48	additional influence from the diaphragm seal	

Reading cycle

HART commands: on average 3 to 4 per second on average.

Update rate

On average 250 to 330 ms.

Dynamic behavior PROFIBUS PA

Dead time, time constant (T63)

For PROFIBUS, the dead time consists of the internal dead time of the device, the response time of the AI function block and the cycle time of the communication buffer:

Types	Dead time t_1	Time constant (T63), t_2
all	440 ms	240 ms
PMP46/48	additional influence from the diaphragm seal	

Response time

- Cyclic: approx. 10 ms per request
- Acyclic: < 50 ms

All values are typical values.

Cycle time (update time)

The cycle time in a bus segment in cyclic data communication depends on the number of devices, the segment coupler used and the internal PLC cycle time.

Damping

4 to 20 mA

- Via DIP switch on the electronic insert, switch position "On" = 2 s, switch position "Off" = 0 s

4 to 20 mA HART

- Via switch on the electronic insert, switch position "On" = set value, switch position "Off" = 0 s
- Via handheld terminal or PC with operating program, continuous 0 to 40 s
- Factory setting: 2 s

PROFIBUS PA

- Via handheld terminal or PC with operating program, continuous 0 to 40 s
- Factory setting: 0.0 s

Power supply

Electrical connection

Note!

- When using the measuring device in hazardous areas, installation must comply with the corresponding national standards and regulations and the Safety Instructions or Installation or Control Drawings.
  → See also Page 82, "Safety conventions and icons" and "Installation/Control Drawings" sections.
- Protective circuits against reverse polarity, HF influences and overvoltage peaks are integrated.
- The shield or grounding (if present) must always be connected to the internal ground terminal in the housing.

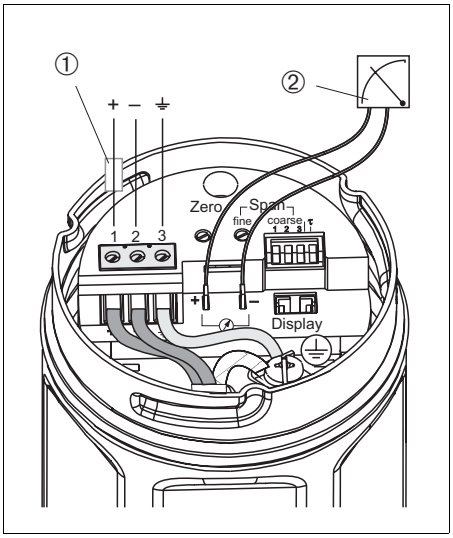

P01-PMx4xxxx-04-xx-xx-xx-000

Analog electronic insert

① *Devices with an ATEX II 1/3 D certificate (non-Ex-powered) must be protected with a 50 mA fuse (slow-blow).*

② *4 to 20 mA test signal: you can take a 4 to 20 mA test signal via the terminal lugs without interrupting the measurement.*

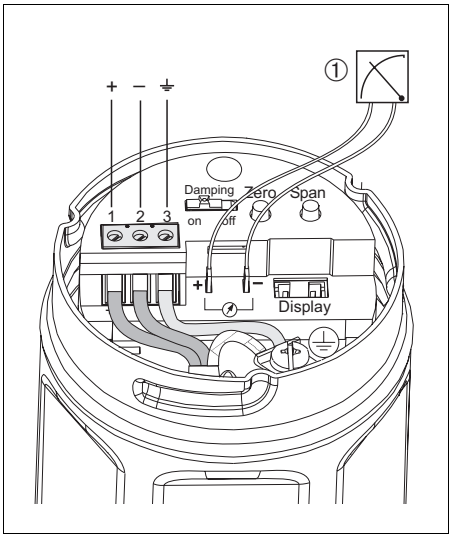

P01-PMx4xxxx-04-xx-xx-xx-001

4 to 20 mA HART electronic insert

① *4 to 20 mA test signal: you can take a 4 to 20 mA test signal via the terminal lugs without interrupting the measurement.*

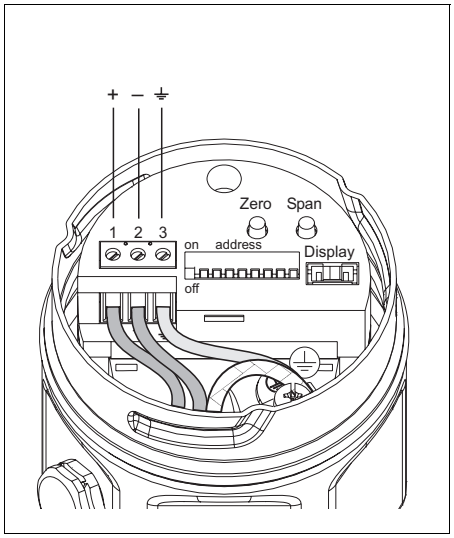

P01-PMx4xxxx-04-xx-xx-xx-002

PROFIBUS PA electronic insert

Devices with M12 connector

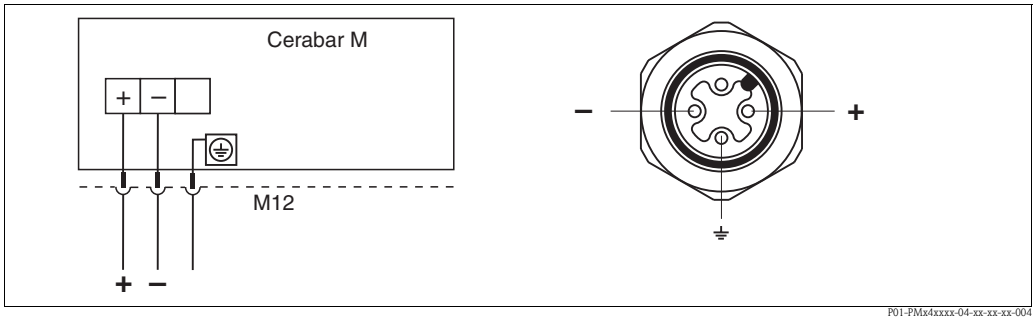

Left: electrical connection for devices with M12 connector
Right: view of the connector at the device

Endress+Hauser offers the following accessories for devices with M12 connectors:

Plug-in jack M 12x1, straight
- Material: body PA; coupling nut CuZn, nickel-plated
- Degree of protection (plugged in): IP67
- Order number: 52006263

Plug-in jack M 12x1, elbowed
- Material: body PBT/PA; coupling nut GD-Zn, nickel-plated
- Degree of protection (plugged in): IP67
- Order number: 51006327

Cable 4x0.34 mm^2 with M12 socket, elbowed, screw plug, 5 m length
- Material: body PUR; coupling nut CuSn/Ni; cable PVC
- Degree of protection (plugged in): IP67
- Order number: 52010285

Devices with Harting connector Han7D

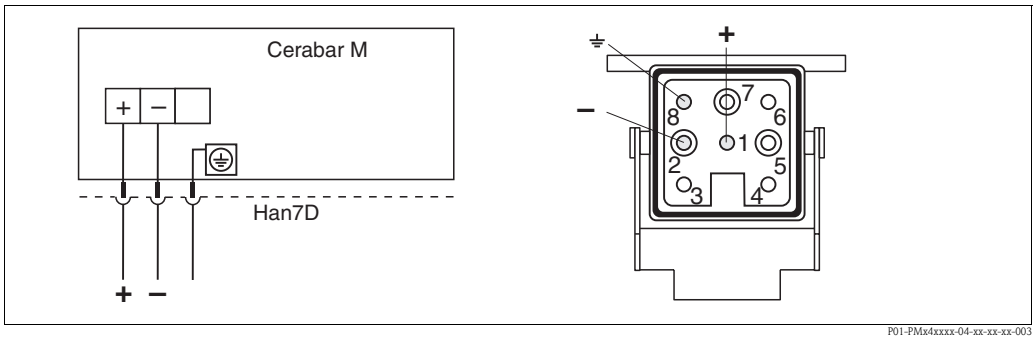

Left: electrical connection for devices with Harting connector Han7D
Right: view of the connector at the device

Connecting the cable version

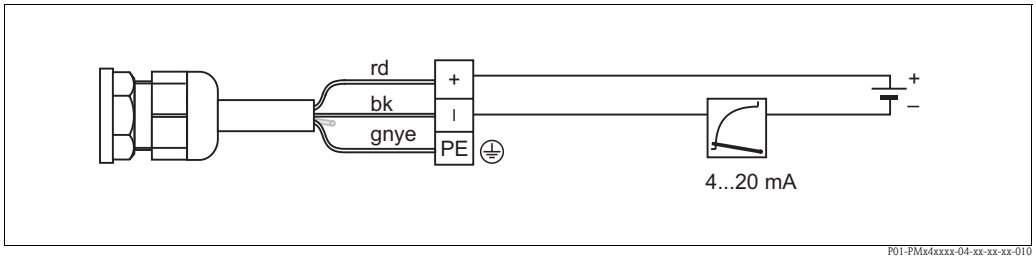

rd = red, bk = black, gnye = green-yellow

Connecting the valve connector M16, ISO4400

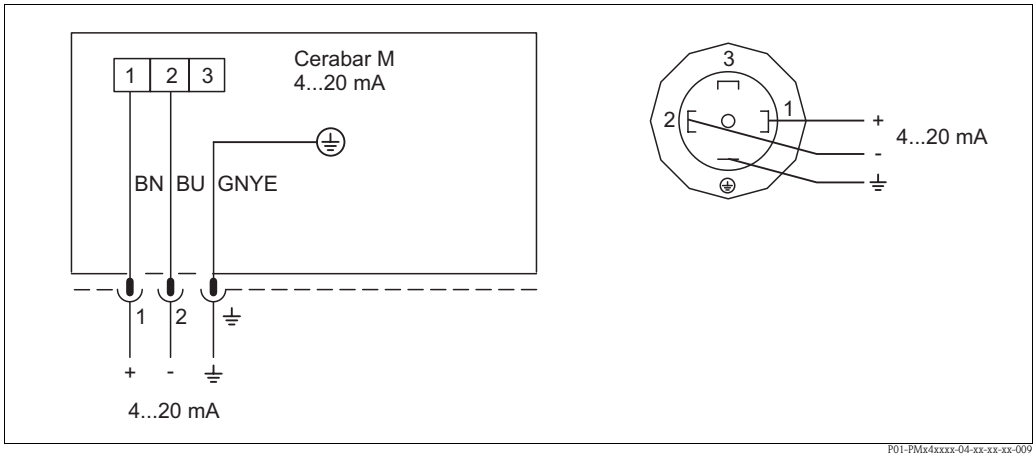

BN = brown, BU = blue, GNYE = green/yellow

Supply voltage

Note!
- When using the measuring device in hazardous areas, installation must comply with the corresponding national standards and regulations and the Safety Instructions or Installation or Control Drawings.
- All explosion protection data are given in separate documentation which is available upon request. The Ex documentation is supplied as standard with all devices approved for use in hazardous areas. → See also Page 82, "Safety conventions and icons" and "Installation/Control Drawings" sections.

4 to 20 mA

For non-hazardous areas: 11.5 to 45 V DC

4 to 20 mA HART

For non-hazardous areas: 11.5 to 45 V DC

PROFIBUS PA

For non-hazardous areas: 9 to 32 V DC

Current consumption

PROFIBUS PA: 11 mA ± 1 mA, switch-on current corresponds to IEC 61158-2, Clause 21

Cable entry

→ See also Page 67 ff, feature 20 "Housing; Electrical connection".

Cable specification

- Endress+Hauser recommends using shielded, twisted pair two-wire cables.
- Terminals for wire cross-sections 0.14 to 2.5 mm^2
- Cable outer diameter: 5 to 9 mm

Residual ripple

4 to 20 mA and 4 to 20 mA HART

- Without impact on 4 to 20 mA signal up to ± 5% residual ripple within the permitted voltage range (according to HART hardware specification HCF_SPEC-54 (DIN IEC 60381-1))
- With HART Communicator or Commubox:
  Max. ripple (measured at 500 Ω) 47 to 125 Hz: U_{ss} = 200 mV
  Max. noise (measured at 500 Ω) 500 Hz to 10 kHz: U_{eff} = 2.2 mV

Performance characteristics – general

Reference operating conditions

- As per IEC 60770
- Ambient temperature range T_A = constant, in range: +21 to +33°C (+69.8 to +91.4°F)
- Humidity φ = constant, in range: 20 to 80% RH
- Ambient pressure p_U = constant, in range: 860 to 1060 mbar
- Position of measuring cell = constant, in range: horizontal ±1°
- Input of LOW SENSOR CALIBRATION and HIGH SENSOR CALIBRATION for lower-range value and upper-range value
- Membrane material PMC41 and PMC45: Al_2O_3 (aluminum oxide ceramic)
- Membrane material PMP41, PMP45, PMP46 and PMP48: AISI 316L/1.4435
- Filling oil: synthetic oil
- Supply voltage: 24 V DC ± 3 V DC
- Load for HART: 250 Ω
- Turn down: 1:1 to 10:1

Reference accuracy

Note!
In the case of overpressure measurement using absolute pressure sensors, the accuracy can be affected by fluctuating ambient air pressure.

Uncertainty of measurement for small absolute pressure measuring ranges

The smallest expanded uncertainty of measurement that can be returned by our calibration standards is 0.4% of the set span in the range 1 to 30 mbar.

Long-term stability

- ±0.1% of URL/year
- ±0.25% of URL/3 years

Influence of the orientation

A position-dependent zero point shift can be corrected within the (extended) measuring range. → See also the following section "Raising and lowering the zero point", Page 25, "General installation instructions" section and Page 65 ff, "Installation instructions, diaphragm seal systems" section.

Raising and lowering the zero point

- 4 to 20 mA: ±10% within the extended measuring range
- 4 to 20 mA HART: as required within the extended measuring range
- PROFIBUS PA: as required within the extended measuring range

Examples for extended measuring limits and raising and lowering the zero point

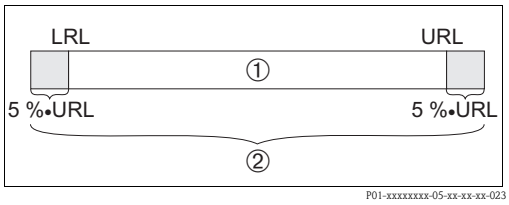

Case 1

Case 1:
- 4 to 20 mA HART or PROFIBUS PA
- And overpressure sensors with a lower-range limit (LRL) > –1 bar

Example 1:
- Sensor measuring range: 0 to 10 bar
- Extended measuring range: –0.5 to 10.5 bar (the zero point can be adjusted in this range)

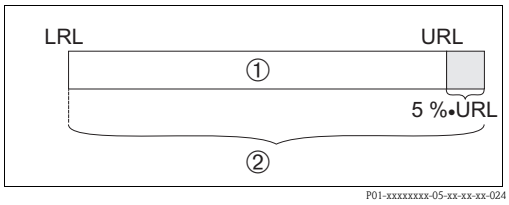

Case 2

Case 2:
- 4 to 20 mA HART or PROFIBUS PA
- Absolute pressure sensors and overpressure sensors with a lower-range limit (LRL) = –1 bar

Example 2:
- Sensor measuring range: –1 to 10 bar
- Extended measuring rang: –1 to 10.5 bar (the zero point can be adjusted in this range)

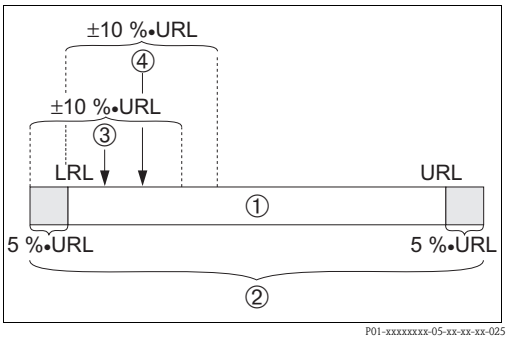

Case 3, example 3 and 4

① *Sensor measuring range*
② *Extended measuring range*
③ *Pressure applied at the device, see Case 3, Example 3*
④ *Pressure applied at the device, see Case 3, Example 4*
LRL *Lower-range limit*
URL *Upper-range limit*

Case 3:
- 4 to 20 mA

Example 3:
- Sensor measuring range: 0 to 10 bar
- Extended measuring range: –0.5 to 10.5 bar
- A pressure of 0.5 bar is applied at the device. The zero point can be adjusted in the range –0.5 to 1.5 bar.

Example 4:
- Sensor measuring range: 0 to 10 bar
- Extended measuring range: -0.5 to 10.5 bar
- A pressure of 1 bar is applied at the device. The zero point can be adjusted in the range 0 to 2 bar.

Vibrations effects

Within the reference accuracy vor vibration amplitudes below:
0 ... 15 Hz: 4 mm (amplitude of distance)
15 ... 150 Hz: 2 g (amplitude of acceleration)
150 ... 2000 Hz: 1g (amplitude of acceleratrion)

Warm-up period

- 4 to 20 mA: 200 ms
- 4 to 20 mA HART: 1 s
- PROFIBUS PA: 1 s

Rise time (T90)

- 4 to 20 mA: 60 ms
- 4 to 20 mA HART: 220 ms
- PROFIBUS PA: 220 ms

Settling time

- 4 to 20 mA: 180 ms
- 4 to 20 mA HART: 600 ms
- PROFIBUS PA: 600 ms

Performance characteristics – ceramic diaphragm

Reference accuracy

Reference accuracy comprises non-linearity after limit point setting, hysteresis and non-reproducibility as per IEC 60770.

PMC41, PMC45:

Measuring cell	% of the set span
100 mbar, 400 mbar ("1C", "1F", "5C", "5F" and "2F" version for feature 30 "Sensor range"; MWP; OPL)	■ ±0.2 x TD ■ Optional [1]: ±0.1 % non-linearity of set span x TD
1 bar, 4 bar, 10 bar, 40 bar	■ ±0.2 ■ Optional [1]: ±0.1 % non-linearity of set span

1) → See also Page 67 ff, chapter "Ordering information" section, feature 40 "Calibration; Unit", version "C"

Note!
In the case of overpressure measurement using absolute pressure sensors, the accuracy can be affected by fluctuating ambient air pressure.

Thermal change of the zero output and the output span

4...20 mA

–10...+60 °C (+14 to +140°F)	–40...–10 °C, +60...+85 °C (-40 to +14°F, +140 to +185°F)	+85...+125 °C (+185 to +257°F) (only PMC45)	% of the set span
X	—	—	■ ±(0.3 x TD + 0.3)
—	X	—	■ ±(0.5 x TD + 0.5)
—	—	X	■ ±(0.8 x TD + 0.8)

4...20 mA HART, PROFIBUS PA

–10...+60 °C (+14 to +140°F)	–40...–10 °C, +60...+85 °C (-40 to +14°F, +140 to +185°F)	+85...+125 °C (+185 to +257°F) (only PMC45)	% of the set span
X	—	—	■ ±(0.2 x TD + 0.2)
—	X	—	■ ±(0.4 x TD + 0.4)
—	—	X	■ ±(0.6 x TD + 0.6)

Temperature coefficient (T_K) for zero output and output span

If the value for the temperature coefficient exceeds the value for the thermal change, the thermal change automatically applies.

4...20 mA

–10...+60 °C (+14 to +140°F)	–40...–10 °C, +60...+85 °C (-40 to +14°F, +140 to +185°F)	+85...+125 °C (+185 to +257°F) (only PMC45)	% of URL/10 K
X	—	—	■ ±0.15
—	X	—	■ ±0.2
—	—	X	■ ±0.25

4...20 mA HART, PROFIBUS PA

–10...+60 °C (+14 to +140°F)	–40...–10 °C, +60...+85 °C (-40 to +14°F, +140 to +185°F)	+85...+125 °C (+185 to +257°F) (only PMC45)	% of URL/10 K
X	—	—	■ ±0.08
—	X	—	■ ±0.1
—	—	X	■ ±0.12

Performance characteristics – metal diaphragm

Reference accuracy

Reference accuracy comprises non-linearity after limit point setting, hysteresis and non-reproducibility as per IEC 60770.

PMP41, PMP45	PMP46, PMP48	% of the set span
X	—	■ 0.2 ■ Optional[1]: ±0,1 % non-linearity of set span
—	X	■ 0.2

1) → See also Page 67 ff, chapter "Ordering information" section, feature 40 "Calibration; Unit", version "C"

Note!
In the case of overpressure measurement using absolute pressure sensors, the accuracy can be affected by fluctuating ambient air pressure.

Thermal change of the zero output and the output span

4...20 mA

–10...+60 °C (+14 to +140°F)	–40...–10 °C, +60...+85 °C (-40 to +14°F, +140 to +185°F)	+85...+125 °C (+185 to +257°F) (only PMP45)	% of the set span
X	—	—	■ ±(0.3 x TD + 0.3)
—	X	—	■ ±(0.5 x TD + 0.5)
—	—	X	■ ±(0.8 x TD + 0.8)

4...20 mA HART, PROFIBUS PA

–10...+60 °C (+14 to +140°F)	–40...–10 °C, +60...+85 °C (-40 to +14°F, +140 to +185°F)	+85...+125 °C (+185 to +257°F) (only PMP45)	% of the set span
X	—	—	■ ±(0.2 x TD + 0.2)
—	X	—	■ ±(0.4 x TD + 0.4)
—	—	X	■ ±(0.6 x TD + 0.6)
PMP46, PMP48: the data apply to the transmitter without a diaphragm seal or capillary line.			

Note!
When using a PMP46/48, the influence of the respective diaphragm seal must also be taken into account. (→ See also Page 59 ff "Planning instructions for diaphragm seal systems", Page 45 ff "Process connections PMP46 (with metal measuring diaphragm)" and Page 51 ff "Process connections PMP48 (with metal measuring diaphragm)").

Temperature coefficient (T_K) for zero output and output span

If the value for the temperature coefficient exceeds the value for the thermal change, the thermal change automatically applies.

4...20 mA

–10...+60 °C (+14 to +140°F)	–40...–10 °C, +60...+85 °C (-40 to +14°F, +140 to +185°F)	+85...+125 °C (+185 to +257°F) (only PMP45)	% of URL/10 K
X	—	—	■ ±0.15
—	X	—	■ ±0.2
—	—	X	■ ±0.25

4...20 mA HART, PROFIBUS PA

–10...+60 °C (+14 to +140°F)	–40...–10 °C, +60...+85 °C (-40 to +14°F, +140 to +185°F)	+85...+125 °C (+185 to +257°F) (only PMP45)	% of URL/10 K
X	—	—	■ ±0.08
—	X	—	■ ±0.1
—	—	X	■ ±0.12
PMP46, PMP48: the data apply to the transmitter without a diaphragm seal or capillary line.			

Operating conditions (installation)

General installation instructions

- The position-dependent zero point shift can be corrected directly at the device by means of a key or a potentiometer. Diaphragm seals also shift the zero point, depending on the installation position (→ see also Page 65, "Installation instructions, diaphragm seal systems" section).
- Endress+Hauser offers a mounting bracket for installing on pipes. → See also Page 26, "Wall and pipe-mounting" section.
- The onsite display can be rotated in 90° stages.
- Devices with EHEDG approval: these devices must be installed in accordance with the Hygienic Equipment Design Criteria to meet the requirements of EHEDG.
- For PMP46, PMP48: see Page 65, "Installation instructions, diaphragm seal system" section.

Measuring arrangement for devices without a diaphragm seal – PMC41, PMC45, PMP41, PMP45

Cerabar M devices without diaphragm seals are mounted as per the norms for a manometer (DIN EN 839-2). We recommend the use of shutoff devices and siphons. The orientation depends on the measuring application.

Pressure measurement in gases

- Mount Cerabar M with shutoff device above the tapping point so that any condensate can flow into the process.

Pressure measurement in steam

- Mount Cerabar M with siphon above the tapping point.
  The siphon reduces the temperature to almost ambient temperature.
- Fill the siphon with liquid before commissioning.

Pressure measurement in liquids

- Mount Cerabar M with shutoff device below or at the same level as the tapping point.
- Do not mount the device at the following positions:
  In the fill curtain, in the tank outlet or at a point in the container which could be affected by pressure pulses from an agitator or a pump.

Mounting with temperature isolator

Endress+Hauser recommends the use of temperature isolators in the event of constant extreme fluid temperatures which lead to the maximum permissible electronics temperature of +85°C (+185°F) being exceeded.
Depending on the filling oil used, Cerabar M devices with temperature isolators can be used for maximum temperatures of up to 260°C (+500°F). → For the temperature application limits of filling oils, see Page 60, "Diaphragm seal filling oil" section.
To minimize the influence of rising heat, Endress+Hauser recommends the device be mounted horizontally or with the housing pointing downwards.
The additional installation height also brings about a zero point shift of maximum 21 mbar due to the hydrostatic column in the temperature isolator. You can correct this zero point shift.

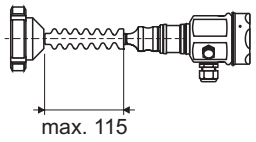

P01-PMP4xxxx-11-xx-xx-xx-006

Wall and pipe-mounting

Endress+Hauser offers a mounting bracket for installing on pipes or walls for PMC41, PMP41, PMP46 and PMP48. You can order the mounting bracket either via the order code (→ see Page 68 ff, feature 60, "Additional option") or separately as an accessory.

PMC41
- Order number: 919806-0000
- Material: AISI 304 (1.4301)

PMP41, PMP46 and PMP48
- Order number: 52001402
- Material: AISI 304 (1.4301)

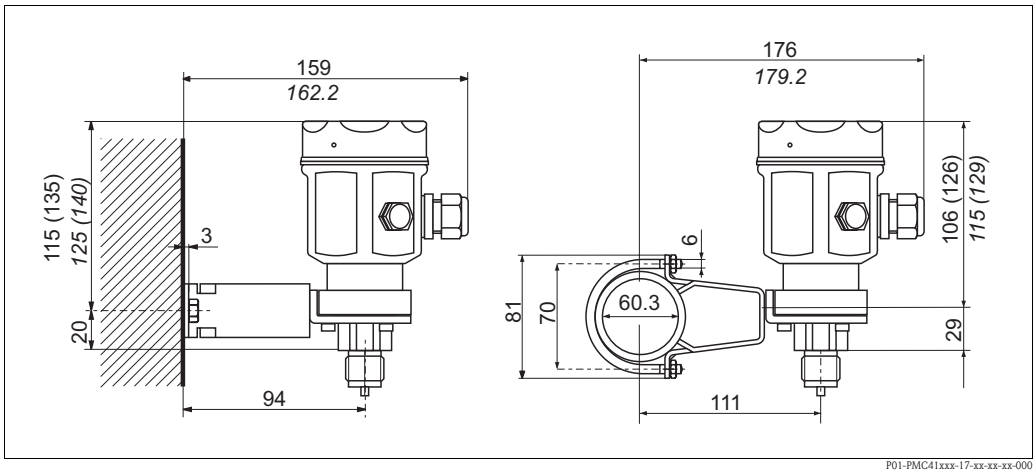

Wall and pipe-mounting PMC41

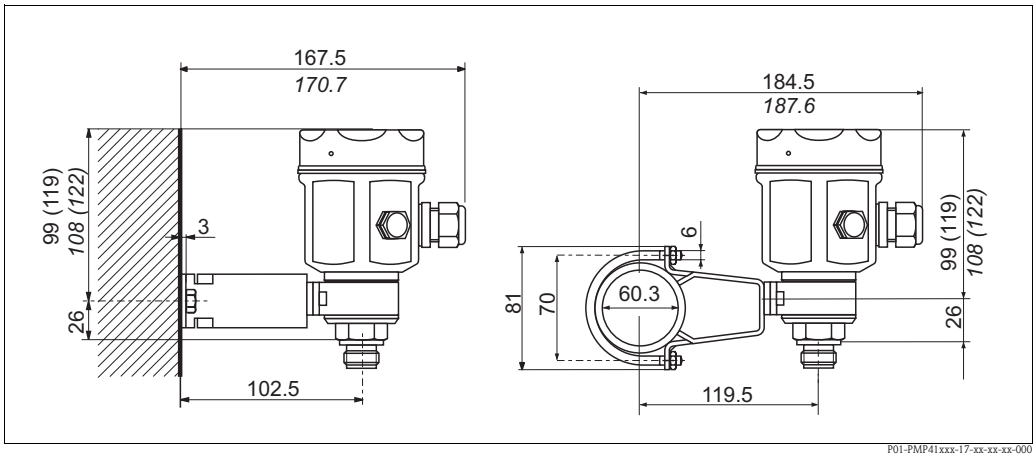

Wall and pipe-mounting PMP41

The dimensions in brackets apply to housings with a raised cover (for optional display). Dimensions written in italics apply to devices with an aluminum housing.

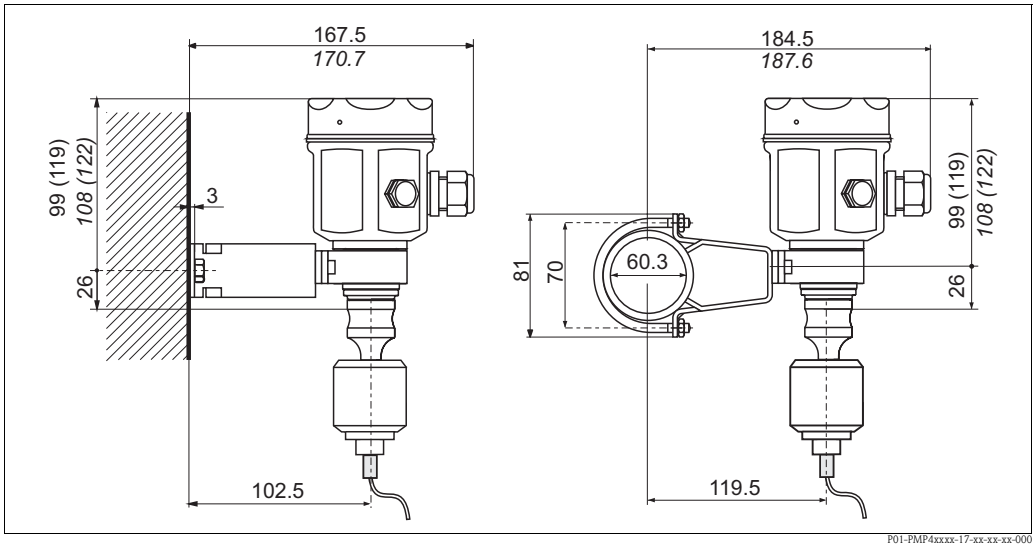

Wall and pipe-mounting PMP46/PMP48

The dimensions in brackets apply to housings with a raised cover (for optional display). Dimensions written in italics apply to devices with an aluminum housing.

Oxygen applications

Oxygen and other gases can react explosively to oils, grease and plastics, such that, among other things, the following precautions must be taken:
- All components of the system, such as measuring devices, must be cleaned in accordance with BAM requirements (DIN 19247). (BAM = Federal Institute for Materials Research and Testing).
- Depending on the materials used, a certain maximum temperature and a maximum pressure must not be exceeded in oxygen applications. The maximum temperature T_{max} for oxygen applications is 60°C (+140°F).

The devices suitable for gaseous oxygen applications are listed in the following table, indicated by p_{max}.

Order code for devices cleaned for oxygen applications	p_{max} for oxygen applications
PMC41 – * ** ** * * * ** 6, for devices with sensors, nominal value < 10 bar	Overpressure limit (OPL) of sensor[1]
PMC41 – * ** ** * * * ** 6, for devices with sensors, nominal value ≥10 bar	30 bar
PMP41 – * ** ** * * * ** C, for devices with sensors, nominal value < 40 bar	Overpressure limit (OPL) of sensor[1]
PMP41 – * ** ** * * * ** C, for devices with sensors, nominal value ≥ 40 bar	160 bar
PMP46 – * ** ** * * * ** N	Depends on the element of the selected components which has the lowest pressure rating: overpressure limit (OPL) of sensor[1] or process connection (1.5 x PN)
PMP48 – * ** ** * * * ** N *	Depends on the element of the selected components which has the lowest pressure rating: overpressure limit (OPL) of sensor [1], process connection (1.5 x PN) or fill fluid (160 bar)

1) → See Page 67 ff "Ordering information", feature 30 "Sensor range; MWP; OPL".

PWIS-free applications

Special cleaning of transmitter to remove paint-wetting impairment substances e.g. for use in paint shops
→ see Page 67 ff "Ordering information", feature 80 "Sensor seal".

Ultrapure gas applications

Endress+Hauser also provides devices which have been cleaned of oil and grease for special applications, such as ultrapure gas. No special restrictions regarding the process conditions apply to these devices.

→ See also Page 68, PMC41: feature 80 "Sensor seal".
→ See also Page 73, PMP41: feature 80 "Seal; Fill fluid".

Operating conditions (environment)

Ambient temperature limits

- 40 to +85°C (–40 to +185°F)
- Onsite display 4 to 20 mA: –30 to +80°C (–22 to +176°F)
- Onsite display 4 to 20 mA HART, PROFIBUS PA: –25 to +70°C (–13 to +158°F)
  Lower temperatures minimize the speed and contrast of the display.

Note!
For high-temperature applications, either a PMP46/48 with a temperature isolator or with a capillary can be used. If vibrations also occur in the application, Endress+Hauser recommends you use a PMP46/48 with a capillary.If a PMP46/48 with a temperature isolator or capillary is used, we recommend a suitable bracket for mounting (see "Wall and pipe-mounting" section on Page 26).

For devices for use in hazardous areas, see Safety Instructions, Installation or Control Drawing (ZDs).
(→ See also Page 82, "Safety conventions and icons" and "Installation/Control Drawing" sections)

Storage temperature range

- -40 to +100°C (–40 to +212°F)
- Onsite display: –40 to +80°C (–40 to +176°F)

Degree of protection

- → See Page 67 ff, feature 20 "Housing; Electrical connection".

Climate class

Class 4K4H (air temperature: –20 to 55°C (–4 to 131°F), relative humidity: 4 to 100%)
fulfilled as per DIN EN 60721-3-4 (condensation possible)

Electromagnetic compatibility

- Interference emission as per EN 61326 for class B equipment, interference immunity as per EN 61326 appendix A (industrial use) and NAMUR Recommendation on EMC (NE 21).
- Maximum measured error: < 0.5 % of span (100 mbar sensors: < 1.25% of span)
- In the event of surge influence (EN 61000-4-5), deviations greater than the specified measured error can occur briefly.
- All measurements were performed with a turn down (TD) = 1:1.

Operating conditions (process)

Process temperature limits

Note!
- For oxygen applications, see Page 27, "Oxygen applications" section.
- PMC41 and PMC45: extreme jumps in temperature can result in temporary measuring errors. Temperature compensation takes effect after several minutes. Internal temperature compensation is faster the smaller the temperature jump and the longer the time interval.

PMC41 (with ceramic measuring diaphragm)

- -40 to +100°C (–40 to +212°F)
- Observe temperature operating range of the seal. → See also the following section "Temperature operating range, seals".

PMC45 (with ceramic measuring diaphragm)

- –40 to +125°C (–40 to +257°F) (+150°C (+302°F) for max. 1 hour)
- Observe temperature operating range of the seal. → See also the following section "Temperature operating range, seals".

PMP41 (with metal measuring diaphragm)

- -40 to +100°C (–40 to +212°F)
- Observe temperature operating range of the seal. → See also the following section "Temperature operating range, seals".

PMP45 (with metal measuring diaphragm)

- –40 to +125°C (–40 to +257°F) (+150°C (+302°F) for max. 1 hour)

PMP46 and PMP48 (with metal measuring diaphragm)

- –70 to +400 °C, depends on the diaphragm seal and filling oil
  Observe the temperature application limits of the diaphragm seal oil. → See also Page 60, "Diaphragm seal filling oils" section.
- PMP48 with PTFE coating: –50 to +205 °C

Temperature operating range, seals

PMC41 (with ceramic measuring diaphragm)

Version for feature 80 in the order code	Seal	Temperature operating range
1	FKM Viton	–20 to +100°C (–4 to +212°F)
2	NBR	–20 to +80°C (–4 to +176°F)
4	EPDM	–20 to +100°C (–4 to +212°F)
C	Chemraz, Compound 505	–10 to +100°C (+14 to 212°F)
7	Kalrez, Compound 4079	+5 to +100°C (+41 to 257°F)
M	Kalrez, cleaned for PWIS-free applications	+5 to +100°C (+41 to 257°F)
A	FKM Viton, cleaned from oil + grease	–10 to +100°C (+14 to 212°F)
6	FKM Viton, cleaned for oxygen service	–10 to +60°C (+14 to 140°F)
L	FKM Viton, cleaned for PWIS-free applications	–10 to +60°C (+14 to 140°F)
9	Silicone to be ordered as special version	–40 to +100°C (–40 to +212°F)

PMC45 (with ceramic measuring diaphragm)

Version for feature 80 in the order code	Seal	Temperature operating range
1	FKM Viton	–20 to +125°C/150°C [1)] (–4 to +257°F/302°F)
4, [2)]	EPDM (FDA 21CFR177.2600); 3A Class II; USP Class VI	–20 to +125 °C/150 °C [1)]

Version for feature 80 in the order code	Seal	Temperature operating range
4 [3]	EPDM	–20 to +125°C (–4 to +257°F)
7	Kalrez, Compound 4079	+5 to +125 °C/150 °C [1]
C	Chemraz, Compound 505	–10 to +125 °C/150 °C [1]
2 [2] [3]	HNBR (FDA 21CFR177.2600); 3A Class II; KTW; AFNOR; BAM	–20 to +125°C (–4 to +257°F)
2 [3]	NBR	–20 to +80°C (–4 to +176°F)
M	Kalrez, cleaned for PWIS-free applications	+5 to +125°C (+41 to 257°F)
A	FKM Viton, oil and grease removed	–10 to +125°C (+14 to 257°F)
L	FKM Viton, cleaned for PWIS-free applications	–10 to +125°C (+14 to 257°F)
9	Silicone to be ordered as special version	–40 to +125°C (–40 to +212°F)

1) 150 °C for max. 1 hour

2) These seals are used for devices with 3A-approved process connections. → See also Page 70 "Ordering information", feature 70 "Process connections".

3) For devices with NBR or HNBR seals, the values for "Thermal change" (→ see Page 23) must be multiplied by a factor of 3.

With applications involving saturated steam, a Cerabar M with a metal diaphragm seal must be used.

PMP41 (with metal measuring diaphragm)

Version in the order code	Seal	Temperature operating range
1	FKM Viton	–20 to +100°C (–4 to +212°F)
4	FKM Viton, cleaned from oil + grease	–20 to +100°C (–4 to +212°F)
H	FKM Viton	–20 to +100°C (–4 to +212°F)
P	PTFE + Alloy C	–40 to +100°C (–40 to +212°F)
F	NBR	–20 to +80°C (–4 to +176°F)

Pressure specifications

- The maximum pressure for the measuring device depends on the element with the lowest pressure rating, see the following sections:
  – → Page 12 ff, "Measuring range"
  – → "Mechanical construction" section
  The MWP (maximum working pressure) is specified on the nameplate. This value refers to a reference temperature of 20°C (68°F) or 100°F for ANSI flanges and may be applied to the device for an unlimited time period. Observe temperature dependency.
- The pressure values permitted at higher temperatures can be found in the following standards:
  – EN 1092-1: 2001 Tab. 18 [1]
  – ASME B 16.5a – 1998 Tab. 2-2.2 F316
  – ASME B 16.5a – 1998 Tab. 2.3.8 N10276
  – JIS B 2220.
- The test pressure corresponds to the overpressure limit (OPL) of the device = MWP x 1.5 [2].
- The Pressure Equipment Directive (EC Directive 97/23/EC) uses the abbreviation "PS". The abbreviation "PS" corresponds to the MWP (maximum working pressure) of the measuring device.
- In the case of sensor range and process connection combinations where the OPL of the process connection is smaller than the nominal value of the sensor, the device is set at the factory to the OPL value of the process connection at the very maximum. If you want to use the entire sensor range, select a process connection with a higher OPL value (1.5 x PN; PN = MWP).
- In oxygen applications, the values for "p_{max} and T_{max} for oxygen applications" as per Page 27, "Oxygen applications" may not be exceeded.

1) With regard to their stability-temperature property, the materials 1.4435 and 1.4404 are grouped together under 13EO in EN 1092-1 Tab. 18. The chemical composition of the two materials can be identical.
2) The equation does not apply for PMP41, PMP45 and PMP48 with a 100 bar measuring cell.

Mechanical construction

Dimensions of stainless steel housing

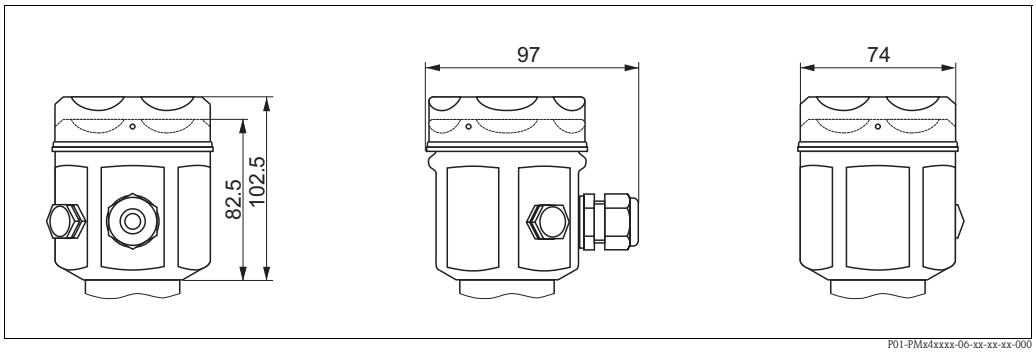

Dimensions of aluminum housing

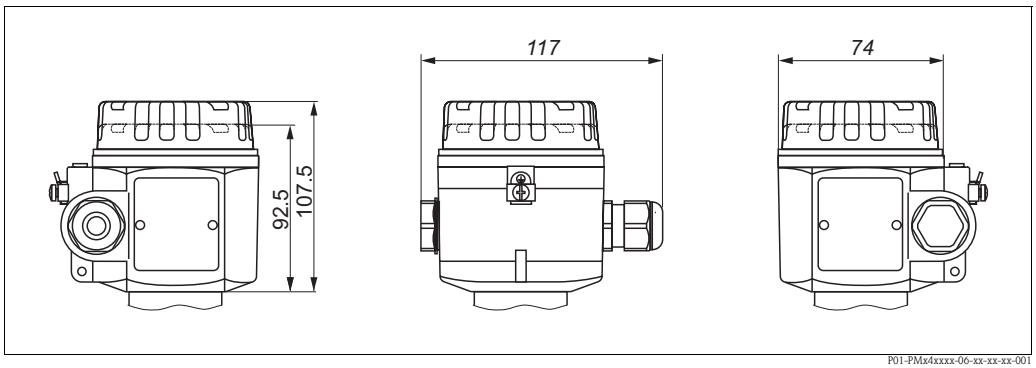

General Note on flanges

The roughness of the surface in contact with the medium, including the sealing surface of the flanges (all standards), made of Hastelloy C, Monel or Tantalum is Ra 0.8.
Lower roughnesses are available on request.

Process connections PMC41 (with ceramic measuring diaphragm)

Note!
- The installation heights in brackets apply to housings with a raised cover (for optional display). Installation heights written in italics apply to devices with an aluminum housing.

Thread, inner diaphragm

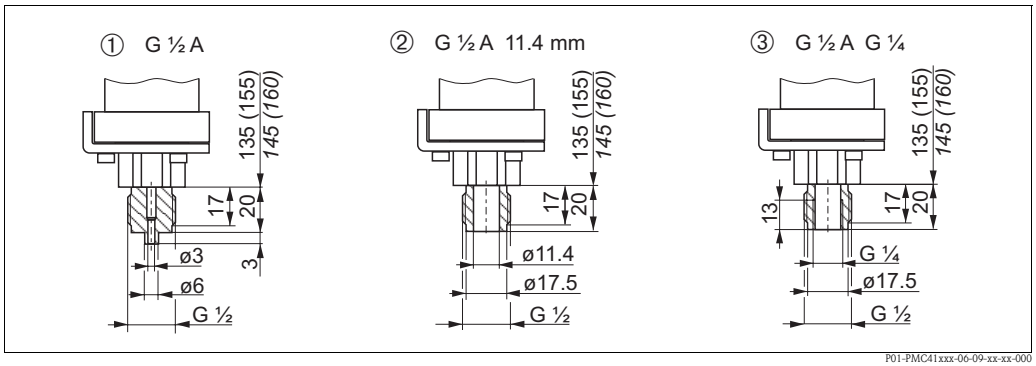

Process connections PMC41, thread ISO 228

① *Thread ISO 228 G 1/2 A, version 1M: AISI 316L, version 2M: Alloy C276 (2.4819)*
② *Thread ISO 228 G 1/2 A bore 11.4 mm, version 1R: AISI 316L*
③ *Thread ISO 228 G 1/2 A G 1/4 (female), version 1P: AISI 316L*

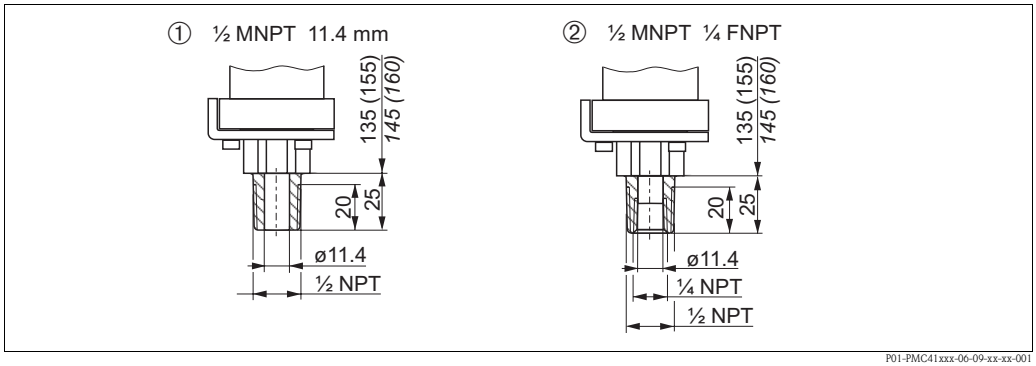

Process connections PMC41, thread ANSI

① *Thread ANSI 1/2 MNPT bore 11.4 mm, version 1A: AISI 316L*
② *Thread ANSI 1/2 MNPT 1/4 FNPT, version 1N: AISI 316L, version 2N: Alloy C276 (2.4819)*

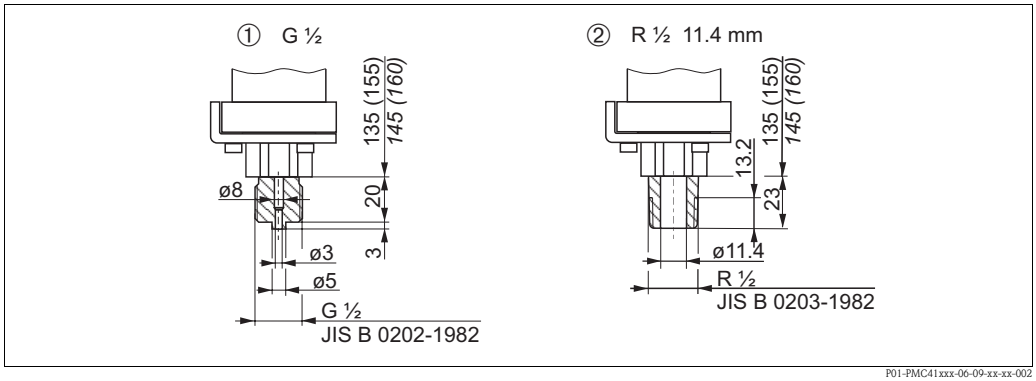

Process connections PMC41, thread JIS

① *Version 1S: thread JIS B0202 G 1/2 (male), material: AISI 316L*
② *Version 1K: thread JIS B0203 R 1/2 (male) bore 11.4 mm, material: AISI 316L*

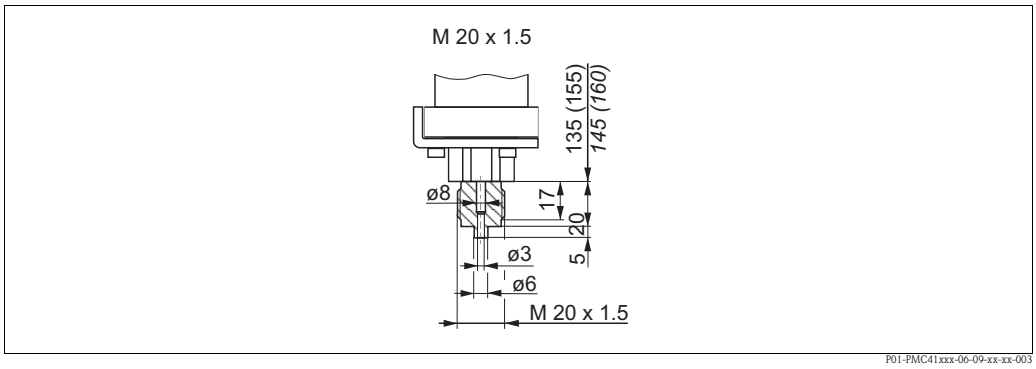

Process connection PMC41, version 1T: thread DIN 13 M20 x 1.5 bore 3 mm, material AISI 316L

Process connections PMC45 (with ceramic measuring diaphragm)

Note!
- The installation heights in brackets apply to housings with a raised cover (for optional display). Installation heights written in italics apply to devices with an aluminum housing.
- Devices with an aluminum housing, raised cover, threaded connection or hygiene connection weigh approx. 2.1 kg. The weights for devices with an aluminum housing, raised cover and flange are given in the tables from Page 37 onwards. Devices with a stainless steel housing weigh approx. 300 g less.
- Many process connections with an EPDM or HNBR seal are 3A-approved for PMC45. This means that a 3A-approved process connection with an EPDM or HNBR seal must be selected when ordering for the 3A approval for the PMC45 version to be valid. → For ordering information on EPDM or HNBR seals, see Page 70 "Ordering information PMC45", feature 80 "Sensor seal", version 2 or 4.

Thread, flush-mounted diaphragm

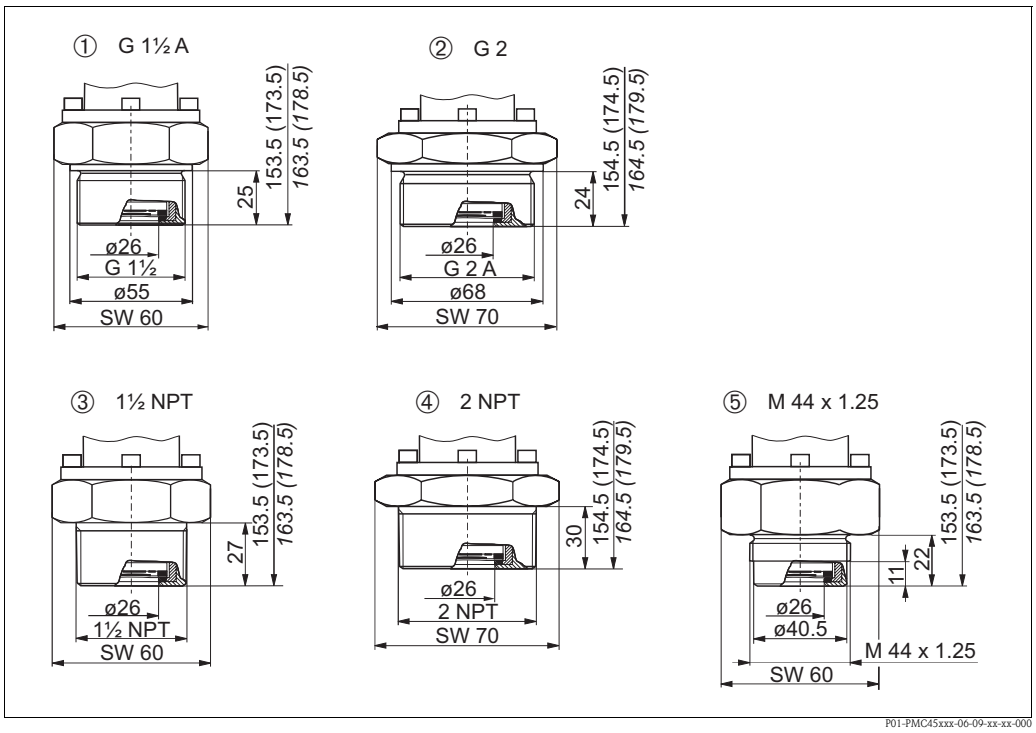

Process connections PMC45, threaded connection, material AISI 316L

① *Version AG: thread ISO 228 G1 1/2 A*
Endress+Hauser also offers welding necks for this process connection. See the following section.
② *Version AR: thread ISO 228 G 2 A*
③ *Version BF: thread ANSI 1 1/2 MNPT*
④ *Version BR: thread ANSI 2 MNPT*
⑤ *Version XK: thread DIN 13 M 44x1.25*

Welding neck G 1 1/2

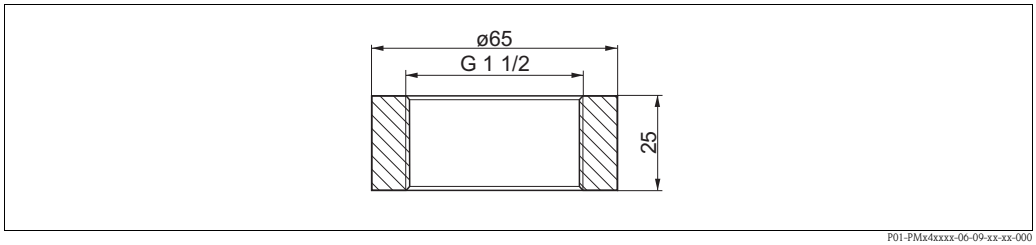

Welding neck for process connection thread ISO 228 G 1 1/2 A (version AG)
order no.: 52024469, order no. with 3.1 inspection certificate: 52024470

Note!
Endress+Hauser offers a pressure sensor dummy for the welding necks with order numbers 52024469 and 52024470. Order number for pressure sensor dummy: 52024471

Tri-Clamp, flush-mounted diaphragm

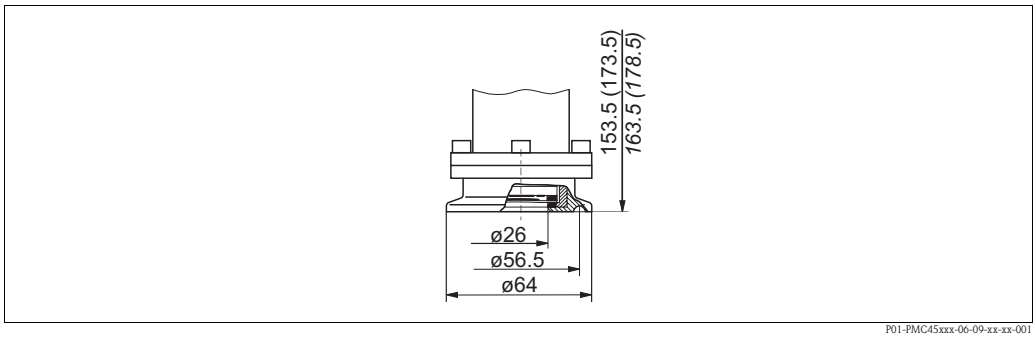

Process connection PMC45, version DL: Tri-Clamp, ISO 2852 DN 51 (2")/DIN 32676 DN 50, material AISI 316L, EHEDG, 3A with HNBR or EPDM seal

Hygienic connections, flush-mounted diaphragm

Many process connections with an EPDM or HNBR seal are approved for the PMC45 in accordance with the guidelines of the 3A Sanitary Standard. To ensure that the 3A approval applies to the PMC45 version, a 3A-approved process connection together with an EPDM or HNBR seal must be selected when ordering.
→ For ordering information on EPDM or HNBR seals, see Page 69 "Ordering information PMC45", feature 80 "Seal".

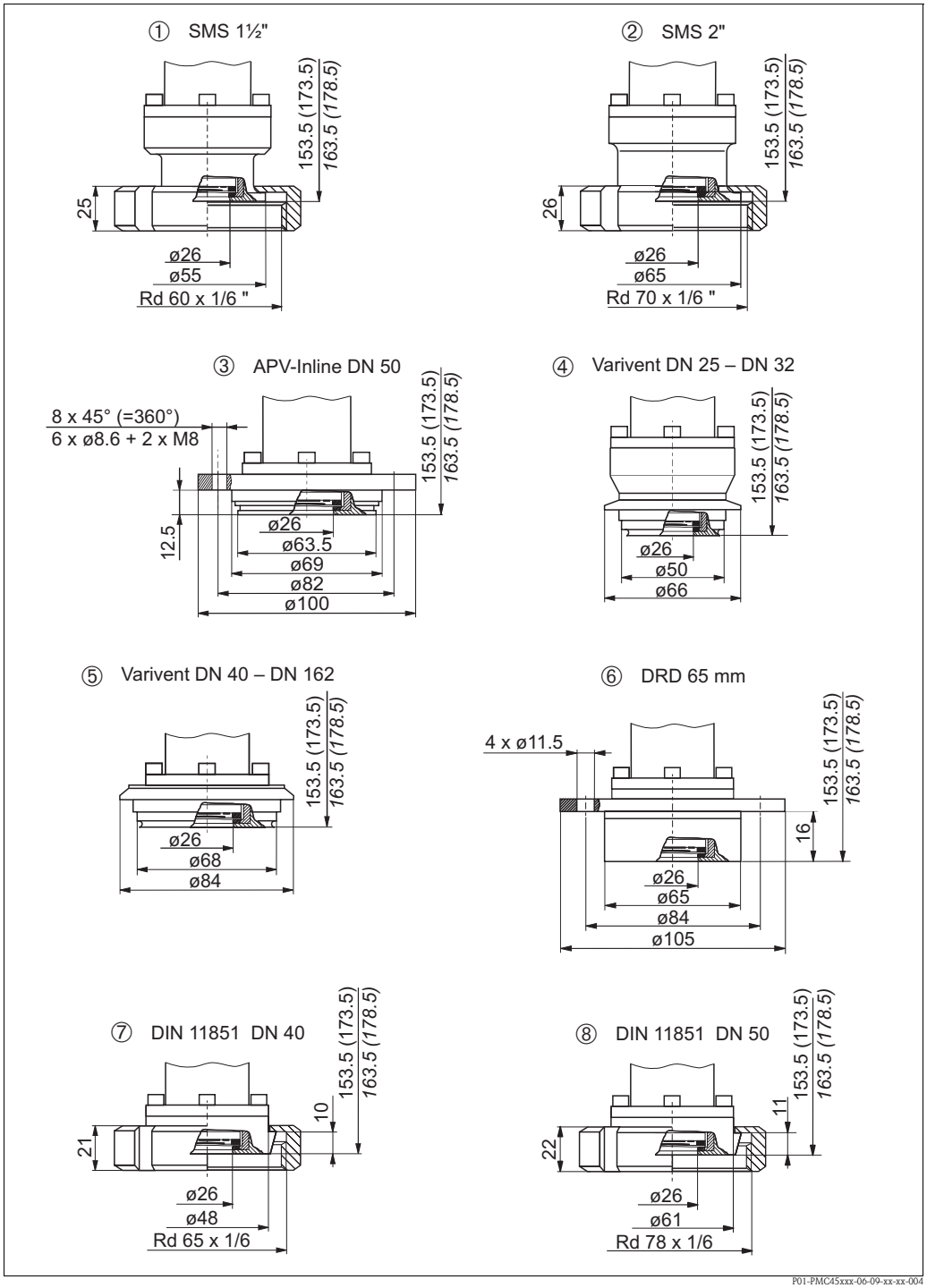

Process connections PMC45, hygienic connections, material AISI 316L
Surface roughness of the surfaces in contact with the medium $R_a \leq 0.8$ µm as standard. Lower surface roughness on request.

① *Version EG: SMS 1 1/2" PN 25, EHEDG, 3A with HNBR or EPDM seal*
② *Version EL: SMS 2" PN 25, EHEDG, 3A with HNBR or EPDM seal*
③ *Version HL: APV-Inline DN 50 PN 40, EHEDG, 3A with HNBR or EPDM seal*
④ *Version LB: Varivent type F for pipes DN 25 – DN 32 PN 40, EHEDG, 3A with HNBR or EPDM seal*
⑤ *Version LL: Varivent type N for pipes DN 40 – DN 162 PN 40, EHEDG, 3A with HNBR or EPDM seal*

⑥ *Version KL: DRD DN50 (65 mm) PN25, 3A with HNBR or EPDM seal; Endress+Hauser offers a welding flange with PTFE seals for flush-mounted installation of a device with a DRD flange. See the following graphic.*
⑦ *Version AH: DIN 11851 DN 40 PN 40, 3A with HNBR or EPDM seal*
⑧ *Version AL: DIN 11851 DN 50 PN 25, 3A with HNBR or EPDM seal*

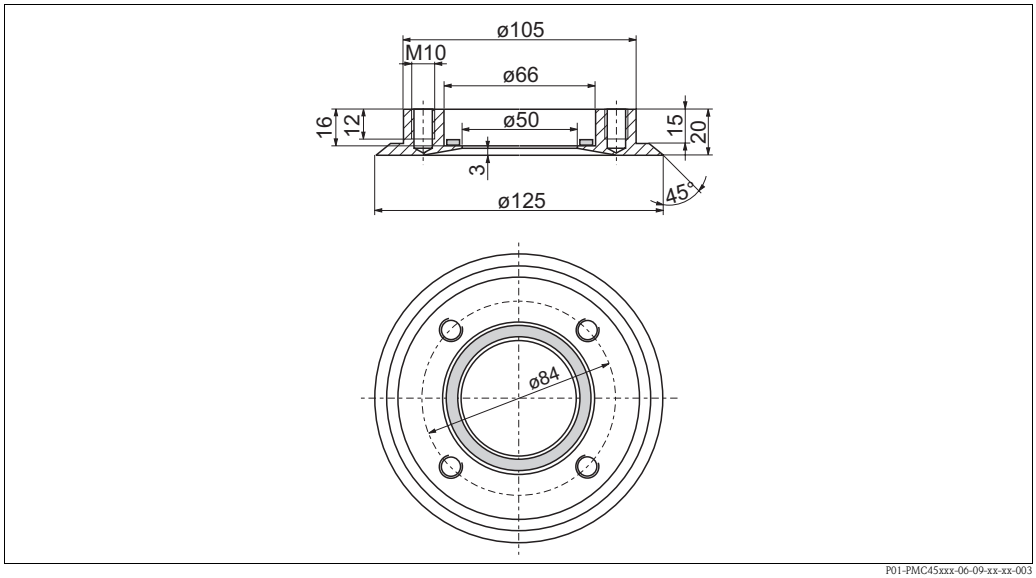

P01-PMC45xxx-06-09-xx-xx-003

Welding flange for flush-mounted installation for devices with a DRD flange.
Order number: 52002041, material: AISI 316L/1.4435;
Order number with 3.1: 52011899, material: AISI 316L/1.4435;
Only PTFE sealing ring: order number: 52024228

Aseptic couplings

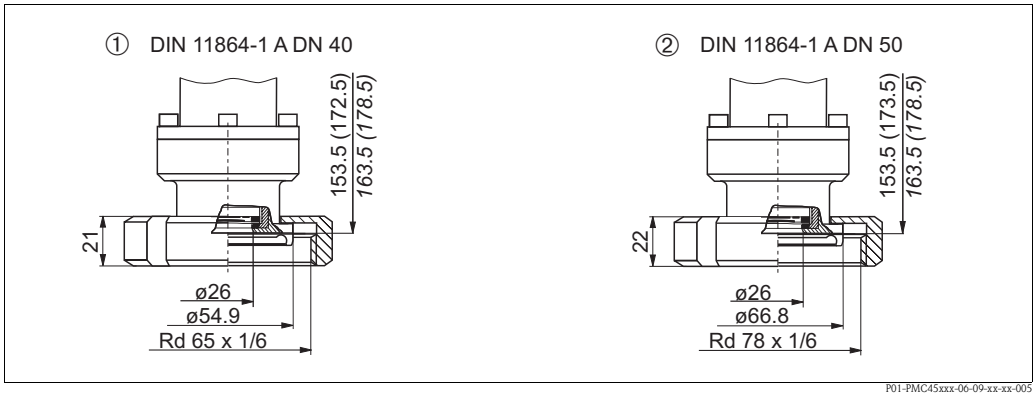

P01-PMC45xxx-06-09-xx-xx-005

Process connections PMC45, aseptic couplings, material AISI 316L
Surface roughness of the surfaces in contact with the medium $R_a \leq 0.8\ \mu m$ as standard. Lower surface roughness on request.

① *Version AS: aseptic DIN 11864–1 form A DN 40 for pipes to DIN 11850, EHEDG, 3A with HNBR/EPDM seal*
② *Version AT: aseptic DIN 11864–1 form A DN 50 for pipes to DIN 11850, EHEDG, 3A with HNBR/EPDM seal*

EN/DIN flanges, connection dimensions as per EN 1092-1/DIN 2527

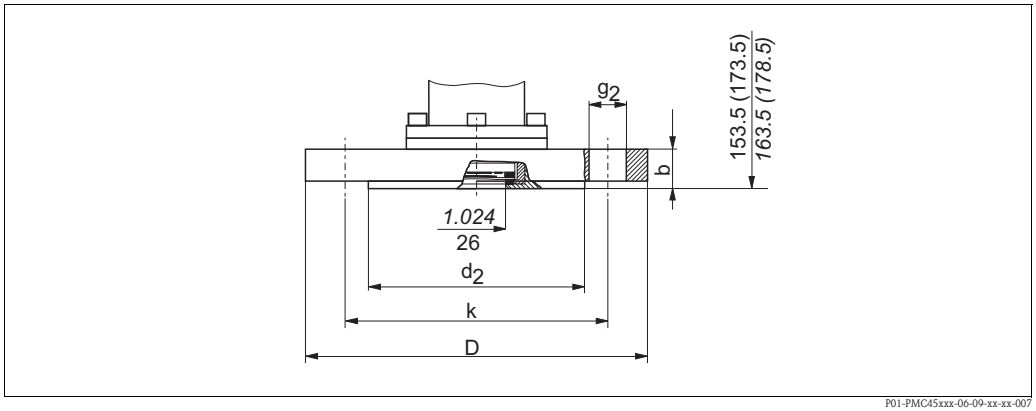

P01-PMC45xxx-06-09-xx-xx-007

Process connection PMC45, EN/DIN flange

	Flange							Boltholes			
Version	**Material**	**Nominal diameter** [mm]	**Nominal pressure** [bar]	**Shape** [1]	**Diameter D** [mm]	**Raised face**	**Thickness b** [mm]	**Quantity**	**Diameter g_2** [mm]	**Hole circle k** [mm]	**Max. total weight** [kg]
EK	AISI 316L	DN 50	PN 10-40	B1 (D)	165	102	20	4	18	125	3.3
WK	AISI 316L[2]			–		–					
EU	AISI 316L	DN 80	PN 10-40	B1 (D)	200	138	24	8	18	160	5.8
WU	AISI 316L [2]			–		–					

1) Designations as per DIN 2527 in brackets

2) ECTFE coating on AISI 316L. Avoid electrostatic charge at the plastic surfaces when using in hazardous areas.

ANSI flanges, connection dimensions as per ANSI B 16.5, raised face RF

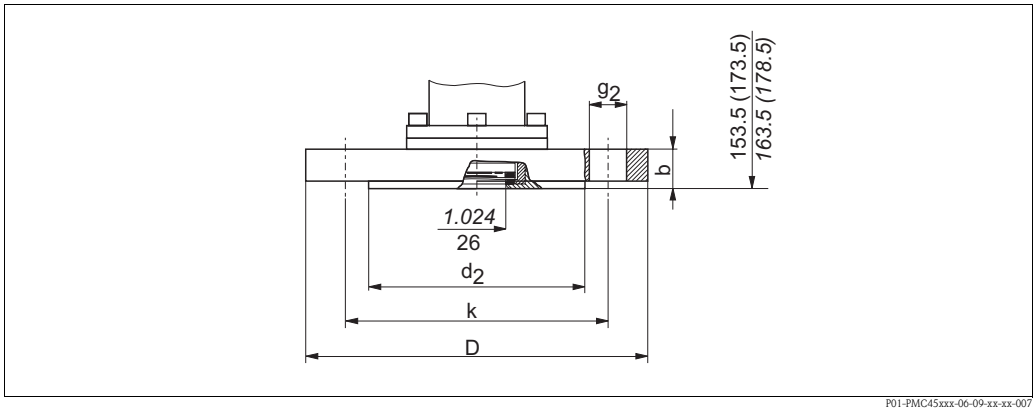

P01-PMC45xxx-06-09-xx-xx-007

Process connection PMC45, ANSI flange with raised face RF

	Flange						Boltholes			
Version	**Material**	**Nominal diameter** [in]	**Class** [lb./sq.in]	**Diameter** **D** [in] *[mm]*	**Thickness** **b** [in] *[mm]*	**Raised face** **g** [in] *[mm]*	**Quantity**	**Diameter** **g_2** [in] *[mm]*	**Hole circle** **k** [in] *[mm]*	**Max. total weight** [kg]
K1	AISI 316/ 316L [1]	1 1/2	150	5 *127*	0.69 *17.5*	2.88 *73.2*	4	0.62 *15.7*	3.88 *98.6*	3.3
K2	AISI 316/ 316L [1]	1 1/2	300	6.12 *155.4*	0.81 *20.6*	2.88 *73.2*	4	0.88 *22.4*	4.5 *114.3*	3.3
KJ	AISI 316/ 316L [1]	2	150	6 *152.4*	0.75 *19.1*	3.62 *91.9*	4	0.75 *19.1*	4.75 *120.7*	3.3
KK	AISI 316/ 316L [1]	2	300	6.5 *165.1*	0.88 *22.4*	3.62 *91.9*	8	0.75 *19.1*	5 *127*	4.1
KU	AISI 316/ 316L [1]	3	150	7.5 *190.5*	0.94 *23.9*	5 *127*	4	0.75 *19.1*	6 *152.4*	5.8
KV	AISI 316/ 316L [1]	3	300	8.25 *209.5*	1.12 *28.4*	5 *127*	8	0.88 *22.4*	6.62 *168.1*	7.9
KW	AISI 316/ 316L [1]	4	150	9 *228.6*	0.94 *23.9*	6.19 *157.2*	8	0.75 *19.1*	7.5 *190.5*	7.9
KX	AISI 316/ 316L [1]	4	300	10 *254*	1.25 *31.8*	6.19 *157.2*	8	0.88 *22.4*	7.88 *200.2*	7.9
VJ	ECTFE [2]	2	150	6 *152.4*	0.75 *19.1*	3.62 *91.9*	4	0.75 *19.1*	4.75 *120.7*	3.3
VU	ECTFE [2]	3	150	7.5 *190.5*	0.94 *23.9*	5 *127*	4	0.75 *19.1*	6 *152.4*	5.5
VN	ECTFE [2]	4	150	9 *228.6*	0.94 *23.9*	6.19 *157.2*	8	0.75 *19.1*	7.5 *190.5*	7.9
ZJ	[3]	2	150	6 *152.4*	0.75 *19.1*	3.62 *91.9*	4	0.75 *19.1*	4.75 *120.7*	3.3
ZU	PVDF [3]	3	150	7.5 *190.5*	0.94 *23.9*	5 *127*	4	0.75 *19.1*	6 *152.4*	5.5

1) Combination of AISI 316 for required pressure resistance and AISI 316L/1.4435 for required chemical resistance (dual rated)

2) ECTFE coating on AISI 316L/1.4435. Avoid electrostatic charge at the plastic surfaces when using in hazardous areas.

3) Max.: 15 bar (225 psi), max.: –10 to +60 °C (+14 to +140 °F)

JIS flanges, connection dimensions as per JIS B 2220 BL, raised face RF

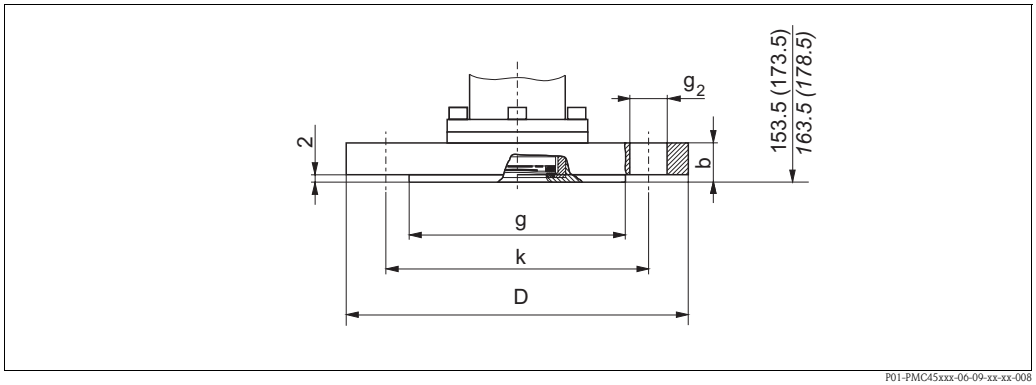

Process connection PMC45, JIS flange with raised face RF (flush-mounted diaphragm), material: AISI 316L/1.4435

	Flange					Boltholes			
Version	**Nominal diameter**	**Nominal pressure**	**Diameter** **D** [mm]	**Thickness** **b** [mm]	**Raised face** **g** [mm]	**Quantity**	**Diameter** **g_2** [mm]	**Hole circle** **k** [mm]	**Total weight** [kg]
RI	50 A	10 K	155	16	96	4	19	120	3.5
RJ	80 A	10 K	185	18	127	8	19	150	4.8

Universal process adapter

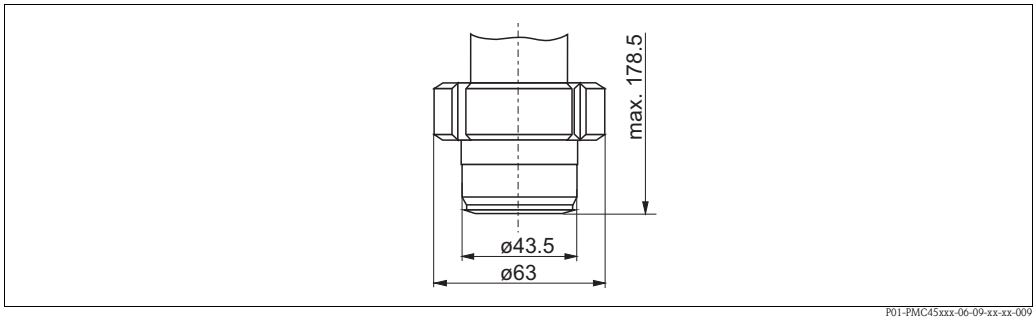

Process connection PMC45, version HA: universal process adapter, PN 10, material AISI 316L/1.4435, EHEDG
A silicone molded seal is enclosed with the process connection (viton on request).

Welding neck for universal process adapter

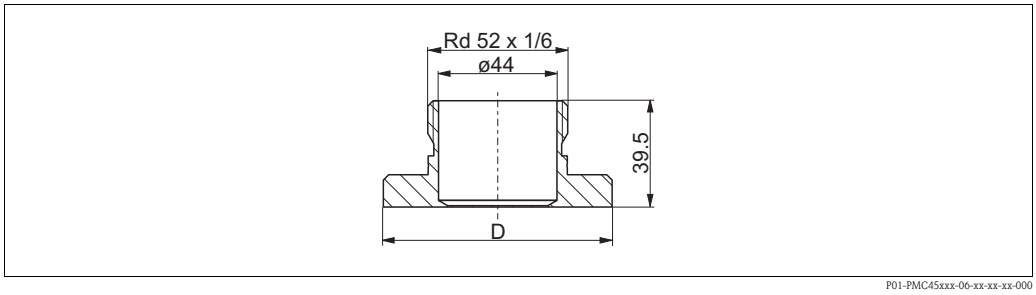

Diameter D	Material	Order number
65 mm	AISI 316L	214880-0002
65 mm	AISI 316L with inspection certificate EN 10204 3.1 material	52010174
85 mm	AISI 316L	52006262
85 mm	AISI 316L with inspection certificate EN 10204 3.1 material	52010173

Welding nozzle

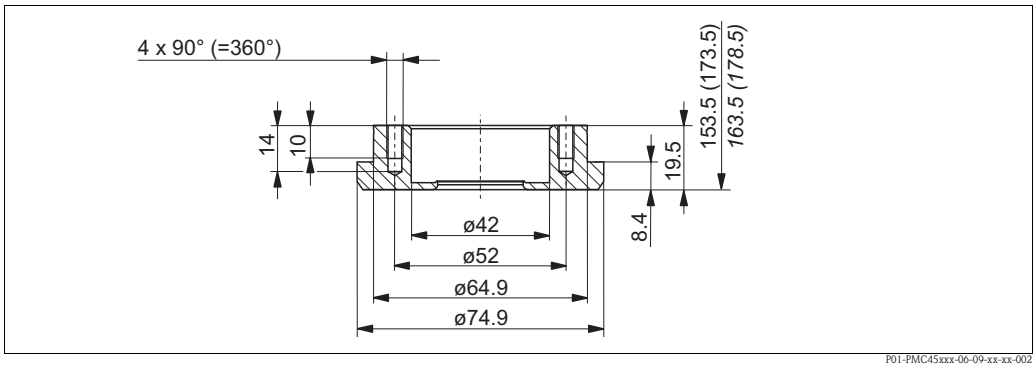

Version XU: welding nozzle 75 mm, material AISI 316L

Process connections PMP41 (with metal measuring diaphragm)

Note!
- The installation heights in brackets apply to housings with a raised cover (for optional display). Installation heights written in italics apply to devices with an aluminum housing.

Thread, inner diaphragm

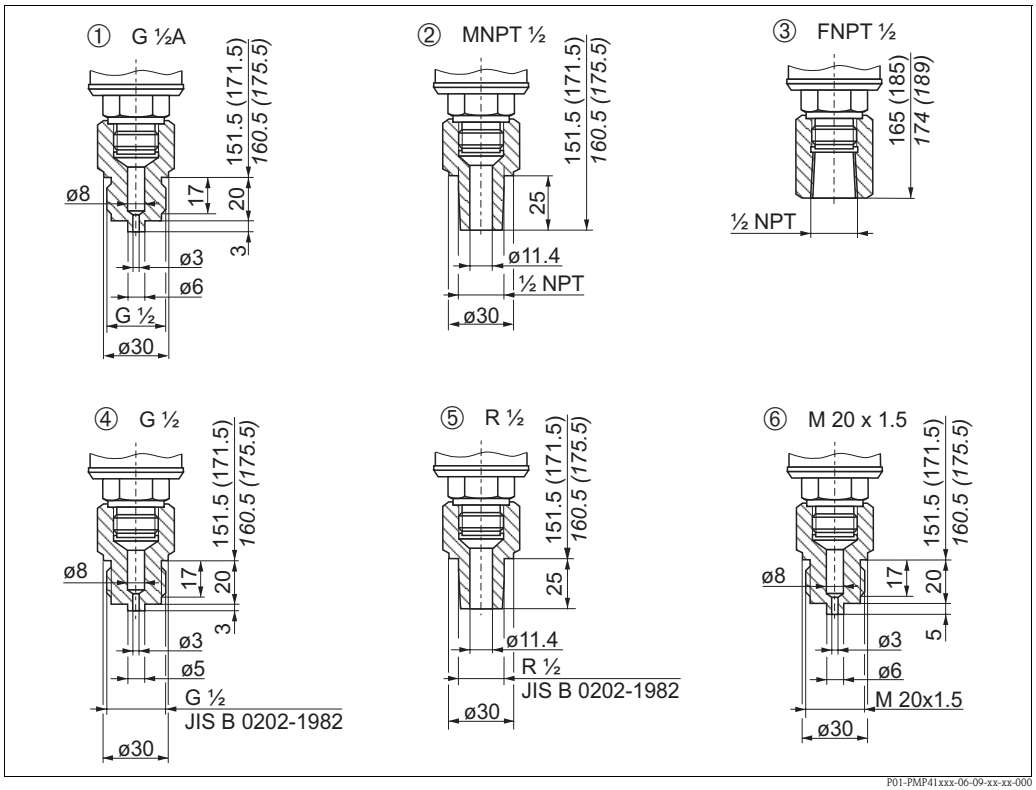

Process connections PMP41, material: AISI 316L

① *Version 1M: thread ISO 228 G 1/2 A*
② *Version 1G: thread ANSI MNPT 1/2, bore 11.4 mm*
③ *Version 1X: thread ANSI FNPT 1/2*
④ *Version 1S: thread JIS B0202 G 1/2 (male)*
⑤ *Version 1K: thread JIS B0203 R 1/2 (male), bore 11.4 mm*
⑥ *Version 1T: thread DIN 13 M 20x1.5*

Note!
The 1M, 1G, 1X, 1S, 1K and 1T versions listed above are available as threaded or welded versions. Using feature 80 "Seal; Fill fluid" in the order code, select the version in conjunction with the seal and the filling oil.
→ See the following page also.

Threaded versions
Can be selected in conjunction with versions 1, H, P for feature 80 "Seal; Fill fluid" in the order code
(→ see Page 70)

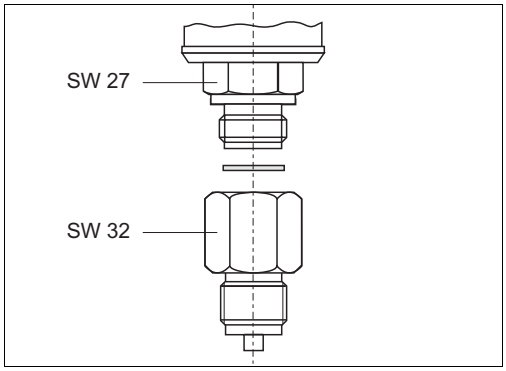

Welded versions
Can be selected in conjunction with versions A, C, D for feature 80 "Seal; Fill fluid" in the order code
(→ see Page 70)

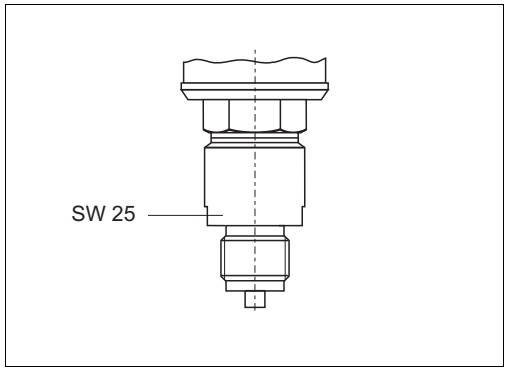

Threaded connection, flush-mounted diaphragm

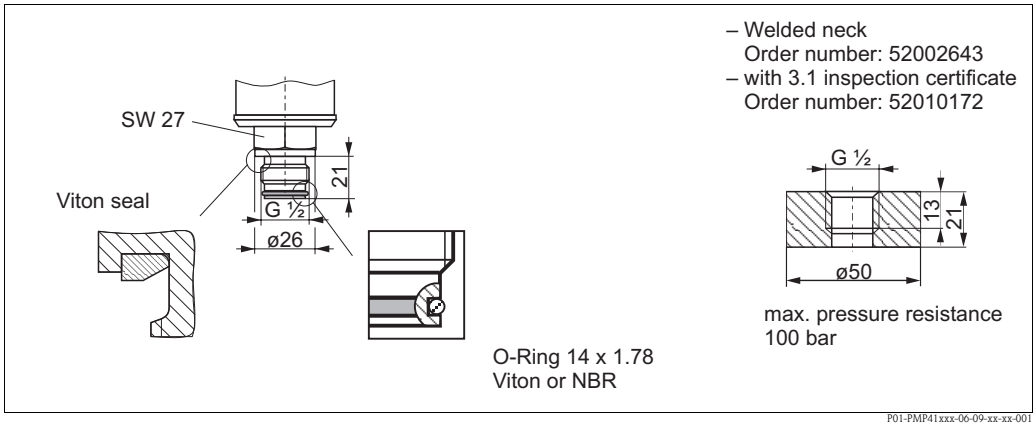

Process connection PMP41, version 1D: thread ISO 228 G 1/2 with O-ring for welding neck, material AISI 316L
This process connection can be selected with versions F or H for feature 80 "Seal; Fill fluid" (→ see Page 70).

Note!
Endress+Hauser offers a pressure sensor dummy for the welding necks with order numbers 52002643 and 52010172. Order number for pressure sensor dummy: 52005082

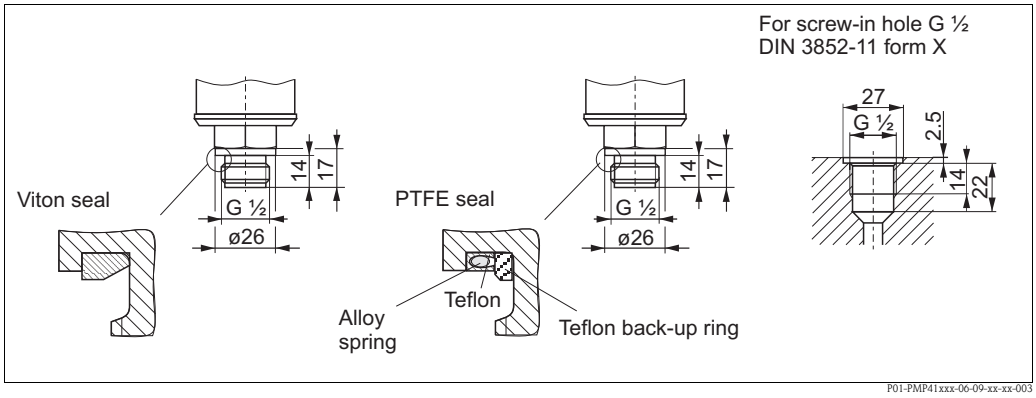

Process connection PMP41, version 1F: thread G 1/2 A; screw-in adapter to DIN 3852-11 form E with seal, material AISI 316L
This process connection can be selected with versions 1, 4 or P for feature 80 "Seal; Fill fluid"(→ see Page 70).

Process connections PMP45 (with metal measuring diaphragm)

Note!
- The installation heights in brackets apply to housings with a raised cover (for optional display). Installation heights written in italics apply to devices with an aluminum housing.

Threaded connection, flush-mounted diaphragm

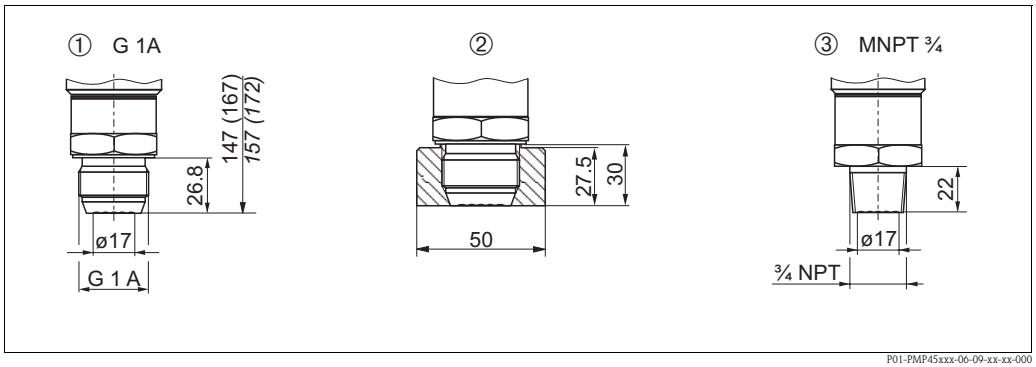

Process connections PMP45, flush-mounted threaded connection, material: AISI 316L

① *Version CD: thread ISO 228 G 1 A, seal metal taper AISI 316L*
for welding neck see 2.
② *Welding neck for process connection thread ISO 228 G 1 A (version CD)*
order number: 52005087; order number with 3.1 inspection certificate: 52010171
max. pressure resistance: 100 bar
③ *Version BB: thread ANSI 3/4 MNPT*

Note!
Endress+Hauser offers a pressure sensor dummy for the welding necks with order numbers 52005087 and 52010171. Order number for pressure sensor dummy: 52005272

Clamp connections

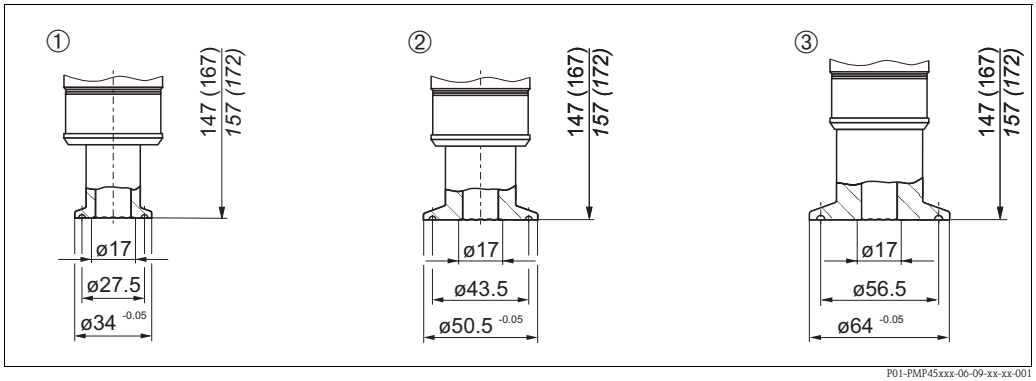

Process connections PMP45, clamp connections, material AISI 316L Surface roughness of the surfaces in contact with the medium $R_a \leq 0{,}8\ \mu m$ als Standard. Lower surface roughness on request.

① *Version DA: Clamp ISO 2852 DN 22 (3/4"), EHEDG, 3A, DIN 32676 DN 20*
② *Version DB: Tri-Clamp ISO 2852 DN 25 – DN 38 (1" – 1 1/2"), EHEDG, 3A, DIN 32676 DN 25 – DN 40*
③ *Version DL: Tri-Clamp ISO 2852 DN 40 – DN 51 (2"), EHEDG, 3A, DIN 32676 DN 50*

Hygienic connections

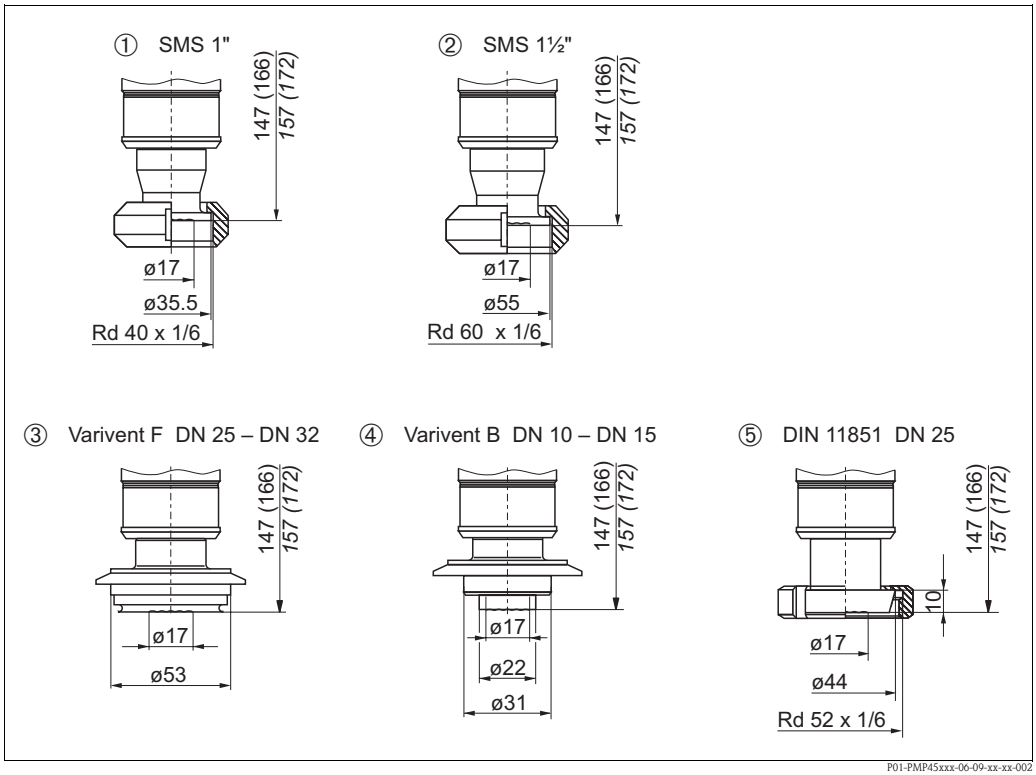

Process connections PMP45, hygienic connections, material AISI 316L

① *Version EB: SMS 1" PN 25, EHEDG, 3A*
② *Version EG: SMS 1 1/2" PN 25, EHEDG, 3A*
③ *Version LB: Varivent type F for pipes DN 25 – DN 32 PN 40, EHEDG, 3A*
④ *Version LG: Varivent type B for pipes DN 10 – DN 15 PN 40, EHEDG, 3A*
⑤ *Version AB: DIN 11851 DN 25 PN 40, 3A*

Process connections PMP46 (with metal measuring diaphragm)

Note!

- The following tables contain information on the temperature coefficients "T_K Process" and "T_K Ambient". The values given are typical values. These temperature coefficients apply to silicone oil and diaphragm material AISI 316L/1.4435. For other filling oils, these temperature coefficients must be multiplied by the T_K correction factor of the corresponding filling oil. For the T_K correction factors, see Page 60, "Diaphragm seal filling oils" section.
- With regard to the temperature coefficient "T_K Ambient", devices with temperature isolators behave like devices with the same process connection with 1 m capillary.
- In addition, the temperature coefficient "T_K Ambient" is listed in relation to the capillary length for the diaphragm seal versions which can be supplied with capillaries as standard. This information can be found on Page 61 ff, "Influence of the temperature on the zero point" section.
- The tables and drawings always give the maximum installation height for the device version, i.e. this installation height applies to a device with an aluminum housing and a raised cover and without any capillaries. The installation heights for devices with a stainless steel housing and a raised cover are approx. 5 mm less.
- The tables always give the maximum total weight for the device version, i.e. this total weight applies to a device with an aluminum housing and a raised cover. Devices with a stainless steel housing weigh approx. 300 g less.
- The following drawings are schematic diagrams. This means that the dimensions of a diaphragm seal supplied can deviate from the dimensions indicated in this document.

Tri-Clamp ISO 2852

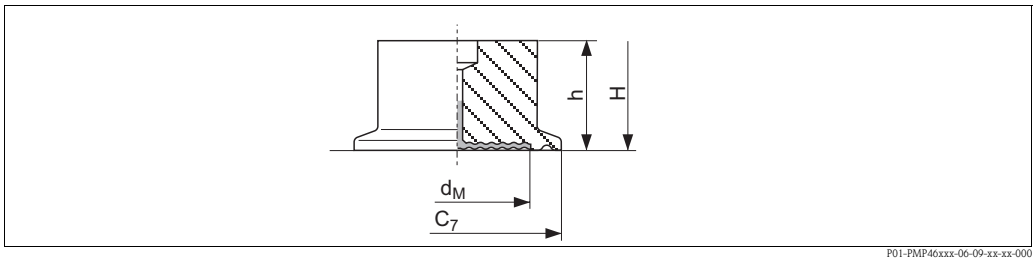

Process connection PMP46, material: AISI 316L, EHEDG, 3A, surface roughness of the surfaces in contact with the medium $R_a \leq 0.8$ µm as standard. Lower surface roughness on request.

Version	Nominal diameter ISO 2852	Nominal diameter DIN 32676	Nominal diameter [in]	Diameter C_7 [mm]	Max. diaphragm diameter d_M [mm]	Height h [mm]	T_K Ambient [mbar/10 K]	T_K Process [mbar/10 K]	Max. installation height H [mm]	Max. total weight [kg]
DF	DN 25	DN 25	1	50.5	24	30	+15.33	+2.85	227	1.6
DG[1]	DN 38	DN 40	1 1/2	50.5	34	30	+8.14	+1.91	227	1.6
DL[1]	DN 51	DN 50	2	64	48	30	+3.45	+1.28	235	1.9
DU	DN 76.1	–	3	91	73	30	+0.3	+0.18	235	2.4

1) Diaphragm seal versions compliant with ASME-BPE for use in biochemical processes, wetted surfaces $R_a \leq 0.4$ µm (15.75 min; 240 grit), electropolished; to be ordered using feature 60 "Additional option", version "P" in the order code

Tri-Clamp pipe diaphragm seal (RDM)

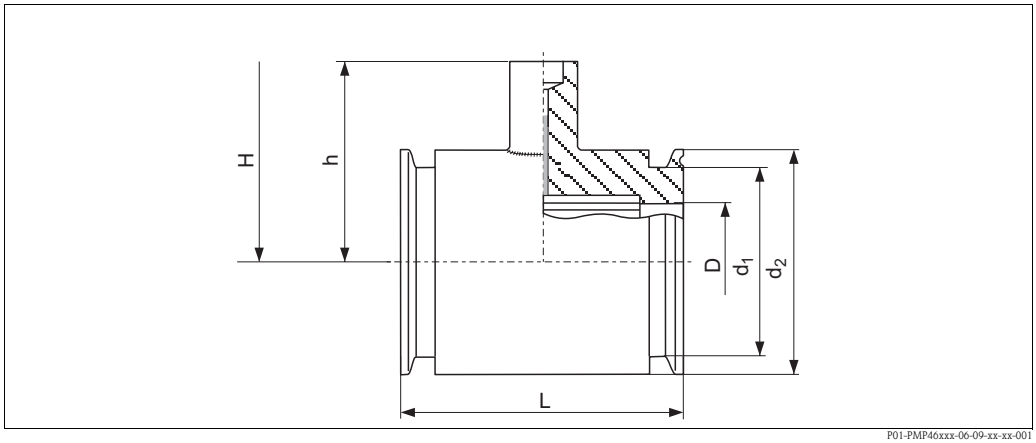

Process connection PMP46, EHEDG, 3A, material AISI 316L, surface roughness of the surfaces in contact with the medium $R_a \leq 0.8$ µm as standard. Lower surface roughness on request.

Version	Nominal diameter ISO 2852	Nominal diameter	Diameter D	Diameter d_1	Diameter d_2	Height h	Face-to-face length L	T_K Ambient	T_K Process	Max. installation height H	Max. total weight
		[inch]	[mm]	[mm]	[mm]	[mm]	[mm]	[mbar/10 K]		[mm]	[kg]
SA	DN 10	3/4	10.5	18	25	60	140	+5.4	+3.1	255	2.9
SB	DN 25	1	22.5	43.5	50.5	67	126	+7.75	+4.49	262	2.9
SC	DN 16	3/4	15.7	19	25	60	120	+5.4	+16.9	255	2.9
SG [1]	DN 38	1 1/2	35.5	43.5	50.5	67	126	+5.17	+3.46	262	2.2
SL [1]	DN 51	2	48.6	56.5	64	79	100	+3.56	+2.69	274	2.9

1) Including 3.1 and pressure test as per Pressure Equipment Directive, Category II

SMS nozzle with coupling nut

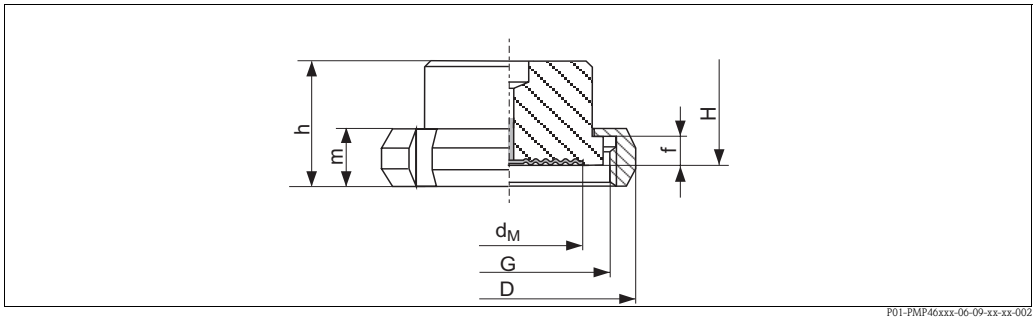

Process connection PMP46, material AISI 316L, 3A, surface roughness of the surfaces in contact with the medium $R_a \leq$ 0.8 µm as standard. Lower surface roughness on request.

Version	Nominal diameter	Nominal pressure	Diameter	Adapter height	Thread	Height	Height	Max. diaphragm diameter	T_K Ambient	T_K Process	Max. installation height	Max. total weight
			D	**f**	**G**	**m**	**h**	**d_M**			**H**	
	[inch]	[bar]	[mm]	[mm]		[mm]	[mm]	[mm]	[mbar/10 K]		[mm]	[kg]
EG	1 1/2	PN 25	74	4	Rd 60 – 1/6	25	57	36	+8.18	+2.59	252	1.8
EL	2	PN 25	84	4	Rd 70 – 1/6	26	62	48	+5.4	+1.76	257	2.2

APV-RJT nozzle with coupling nut

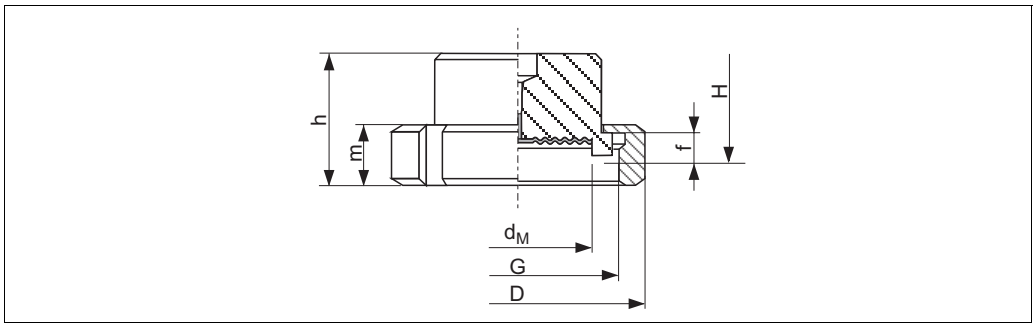

*Process connection PMP46, material AISI 316L, surface roughness of the surfaces in contact with the medium $R_a \leq$ 0.8 *m as standard. Lower surface roughness on request.*

Version	Nominal diameter	Nominal pressure	Diameter	Adapter height	Thread	Height	Height	Max. diaphragm diameter	T_K Ambient	T_K Process	Max. installation height	Max. total weight
		PN	**D**	**f**	**G**	**m**	**h**	**d_M**			**H**	
	[inch]	[bar]	[mm]	[mm]		[mm]	[mm]	[mm]	[mbar/10 K]		[mm]	[kg]
FG	1 1/2	PN 40	72	6.4	2 5/16 – 1/8"	21	60	28	+8.18	+2.59	255	2.0
FL	2	PN 40	86	6.4	2 7/8 – 1/8"	22	61	38	+5.4	+1.76	256	2.2

APV-ISS nozzles with coupling nut

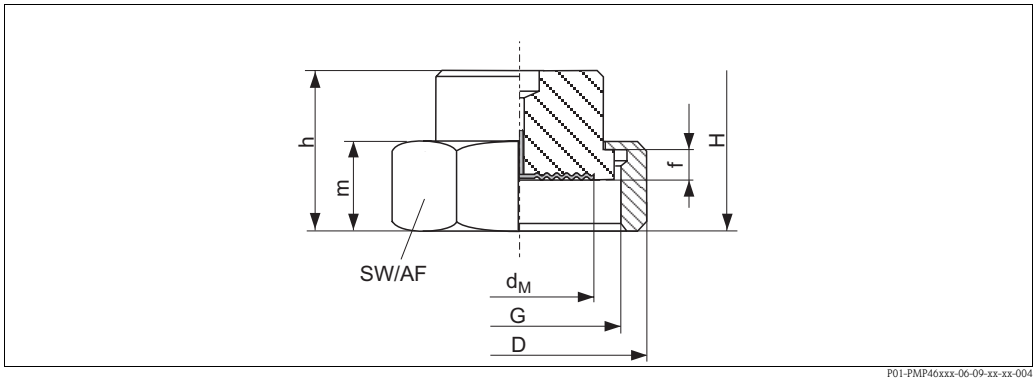

Process connection PMP46, material AISI 316L, 3A, surface roughness of the surfaces in contact with the medium $R_a \leq 0.8$ µm as standard. Lower surface roughness on request.

Version	Nominal diameter [inch]	Nominal pressure [bar]	Diameter D [mm]	Adapter height f [mm]	Thread G	Height m [mm]	Across flats AF	Height h [mm]	Max. diaphragm diameter d_M [mm]	T_K Ambient [mbar/10 K]	T_K Process [mbar/10 K]	Max. installation height H [mm]	Max. total weight [kg]
GG	1 1/2	PN 40	72	4	2" – 1/8"	30	62	70	34	+8.14	+2.59	265	1.9
GL	2	PN 40	89	4	2 1/2" – 1/8"	30	77	70	45	+5.4	+1.76	265	2.2

DRD DN50 (65 mm)

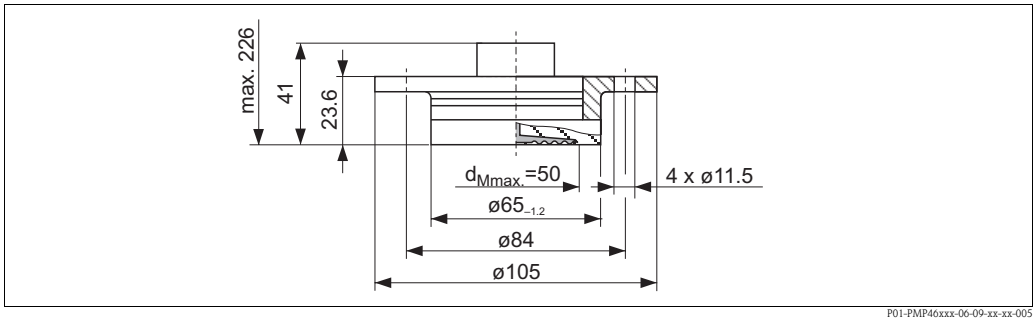

Process connection PMP46, version KL: material AISI 316L, 3A, surface roughness of the surfaces in contact with the medium $R_{a \leq}$ 0.8 µm as standard. Lower surface roughness on request.

Version	Nominal pressure	T_K Ambient [mbar/10 K]	T_K Process [mbar/10 K]	Max. total weight [kg]
KL	PN 25	+2.26	+0.89	2.0

Varivent

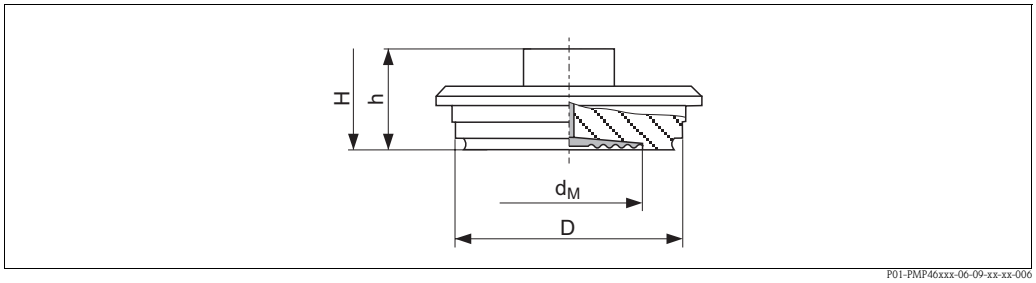

*Process connection PMP46, material AISI 316, 3A, surface roughness of the surfaces in contact with the medium $R_a \leq 0.8$ *m as standard. Lower surface roughness on request.*

Version	Description	Nominal pressure [bar]	Diameter D [mm]	Height h [mm]	Max. diaphragm diameter d_M [mm]	T_K Ambient [mbar/10 K]	T_K Process [mbar/10 K]	Max. installation height H [mm]	Max. total weight [kg]
LB	Type F for pipes DN 25 – DN 32	PN 40	50	55	30	+7.75	+4.49	250	1.8
LL [1]	Type N for pipes DN 40 – DN 162	PN 40	68	55	50	+2.26	+0.89	250	2.1

1) Diaphragm seal versions compliant with ASME-BPE for use in biochemical processes, wetted surfaces $R_a \leq 0.4$ µm (15.75 min; 240 grit), electropolished; to be ordered using feature 60 "Additional option", version "P" in the order code

Taper adapter with coupling nut, DIN 11851 (dairy fitting)

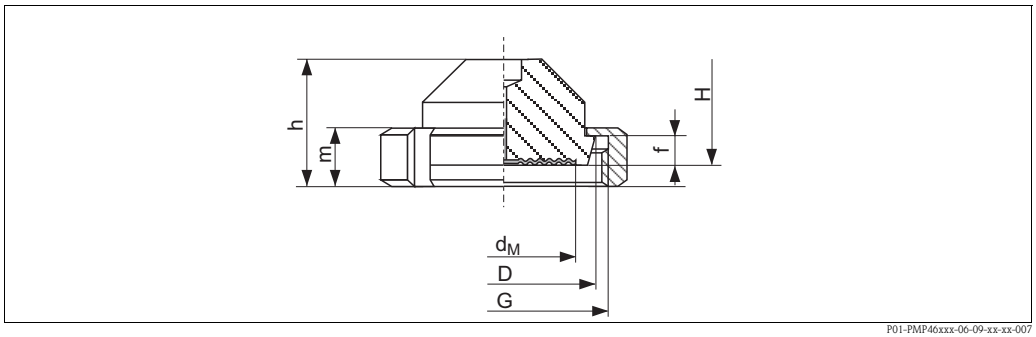

Process connection PMP46, material AISI 316L, 3A, surface roughness of the surfaces in contact with the medium $R_a \leq 0.8$ µm as standard. Lower surface roughness on request.

		Taper adapter			Slotted nut			Diaphragm seal				
Version	Nominal diameter [mm]	Nominal pressure [bar]	Diameter D [mm]	Adapter height f [mm]	Thread G	Height m [mm]	Height h [mm]	Max. diaphragm diameter d_M [mm]	T_K Ambient [mbar/10 K]	T_K Process [mbar/10 K]	Max. installation height H [mm]	Max. total weight [kg]
AG	DN 32	PN 40	50	10	Rd 58 x 1/6	21	54	32	+8.14	+2.59	249	1.9
AH	DN 40	PN 40	56	10	Rd 65 x 1/6	21	53	38	+5.4	+1.76	248	2.0
AL	DN 50	PN 25	68.5	11	Rd 78 x 1/6	22	48	46	+2.21	+0.88	243	2.3

Pipe diaphragm seal, threaded adapter DIN11851 (dairy fitting)

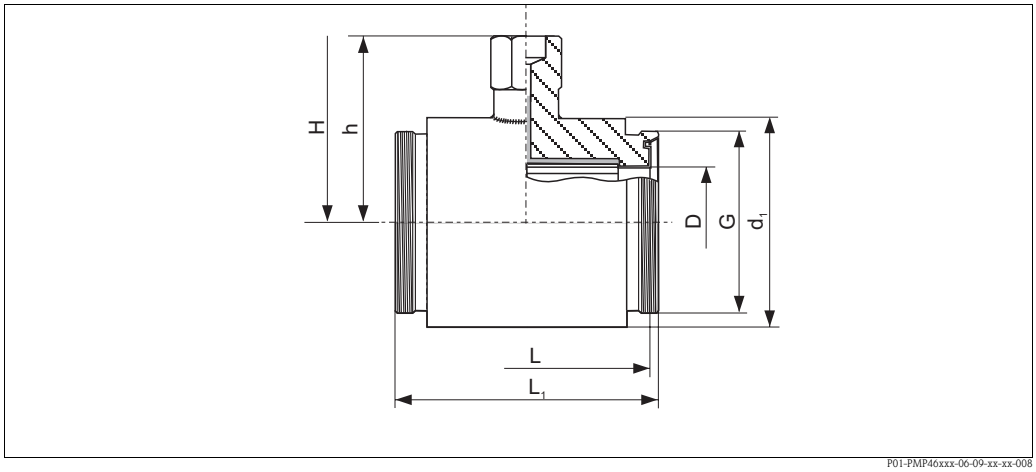

Process connection PMP46, material AISI 316L/1.4435, 3A, surface roughness of the surfaces in contact with the medium $R_a \leq 0.8$ µm as standard. Lower surface roughness on request.

Version	Nominal diameter	Nominal pressure	Diameter D	Diameter d_1	Thread G	Face-to-face length L	Total length L_1	Height h	T_K Ambient	T_K Process	Max. installation height H	Max. total weight
	[mm]	[bar]	[mm]	[mm]		[mm]	[mm]	[mm]	[mbar/10 K]		[mm]	[kg]
PB	DN 25	PN 40	26.2	58	Rd 52 x 1/6	126	140	76	+16.03	+5.17	271	3.0
PH	DN 40	PN 40	38	78	Rd 65 x 1/6	126	140	86	+5.4	+1.76	281	4.4
PL	DN 50	PN 25	50.7	88	Rd 78 x 1/6	100	114	91	+2.21	+0.88	286	3.8

Process connections PMP48 (with metal measuring diaphragm)

Note!

- The following tables contain information on the temperature coefficients "T_K Process" and "T_K Ambient". The values given are typical values. These temperature coefficients apply to silicone oil and diaphragm material AISI 316L/1.4435. For other filling oils, these temperature coefficients must be multiplied by the T_K correction factor of the corresponding filling oil. For the T_K correction factors, see Page 60, "Diaphragm seal filling oils" section.
- The following drawings are schematic diagrams. This means that the dimensions of a diaphragm seal supplied can deviate from the dimensions indicated in this document.
- The tables and drawings always give the maximum installation height for the device version, i.e. this installation height applies to a device with an aluminum housing and a raised cover and without any capillaries. The installation heights for devices with a stainless steel housing and a raised cover are approx. 5 mm less.
- The tables always give the maximum total weight for the device version, i.e. this total weight applies to a device with an aluminum housing and a raised cover. Devices with a stainless steel housing weigh approx. 300 g less.

Threaded connection, flush-mounted diaphragm

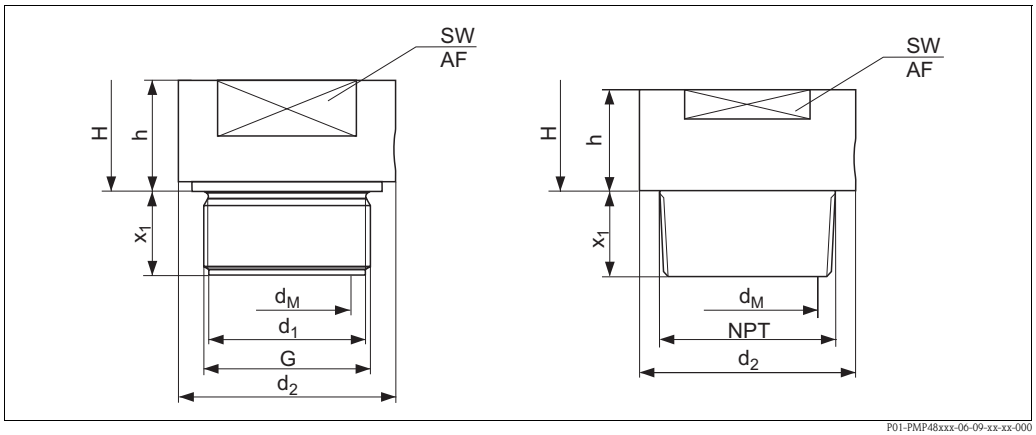

Process connections PMP48, left: thread ISO 228, right: thread ANSI, material AISI 316L

Version	Thread	Nominal pressure PN	Diameter d_1 [mm]	Diameter d_2 [mm]	Screw-in length x_1 [mm]	Across flats SW/AF	Height h [mm]	Max. diaphragm diameter d_M [mm]	T_K Ambient [mbar/10 K]	T_K Process [mbar/10 K]	Max. installation height H [mm]	Max. total weight [kg]
AF	G 1 A	400	30	39	21	32	19	30	+16.03	+5.17	199	1.6
AG[1]	G 1 1/2 A	400	43	55	30	41	20	42	+5.4	+1.76	200	2.1
AR	G 2	400	56	68	30	60	20	50	+1.76	+0.56	200	3.1
BF	1 MNPT	400	–	48	28	41	37	24	+15.66	+4.21	217	1.8
BG	1 1/2 MNPT	400	–	50	30	41	20	36	+8.14	+2.59	200	2.1
BR	2 MNPT	400	–	78	30	65	35	38	+5.4	+2.59	235	3.0

1) Endress+Hauser also offers welding necks for this process connection. → See Page 34.

Thread ISO 228 G 1/2 A and ANSI 1/2 MNPT, seperator

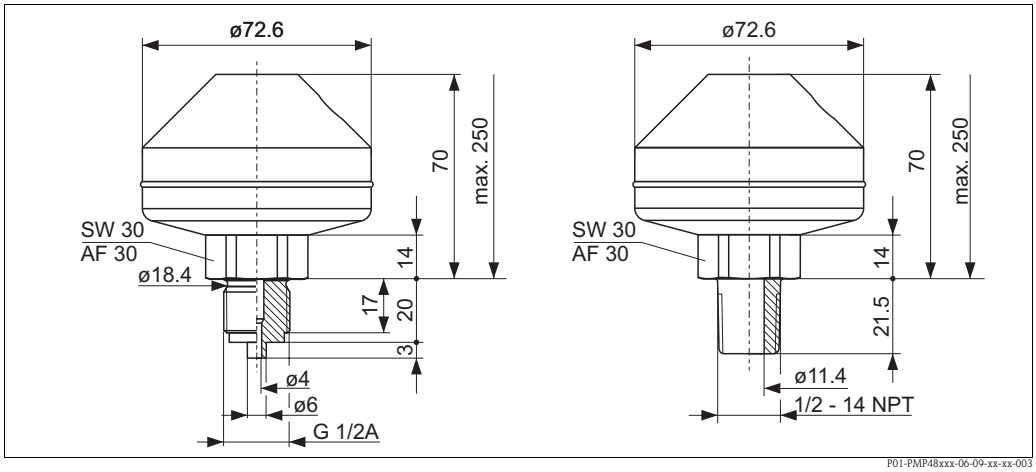

Process connection PMP48, versions "CA" and "DA", welded, material AISI 316L

Version	Description	Nominal pressure	T_K Ambient	T_K Process	Diaphragm seal weight
			[mbar/10 K]		[kg]
CA	ISO 228 G 1/2 A	PN 160	+0.9	+0.3	1.43
DA	ANSI 1/2 MNPT	PN 160	+0.9	+0.3	1.43

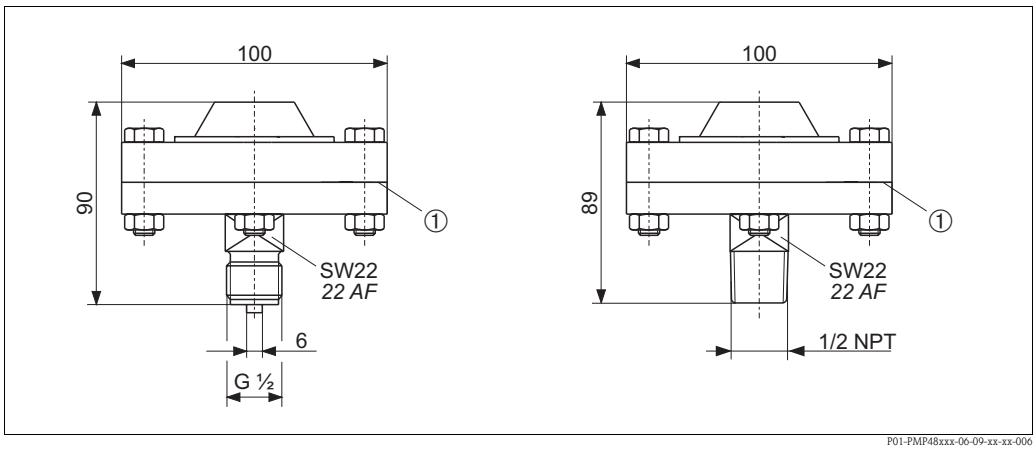

Process connection PMP48, left: version "CA" with threaded connection ISO 228 G 1/2 B, right: version "DA" with threaded connection ANSI 1/2 MNPT

1 PTFE seal as standard max. 260 °C/500 °F (higher temperatures on request)

Version	Measuring range	Description	Nominal pressure	T_K Process	Diaphragm seal weight
				[mbar/10 K]	[kg]
CA	≤ 40 bar	ISO 228 G 1/2 B	PN 40	+0.75	1.43
DA	≤ 40 bar	ANSI 1/2 MNPT	PN 40	+0.55	1.43

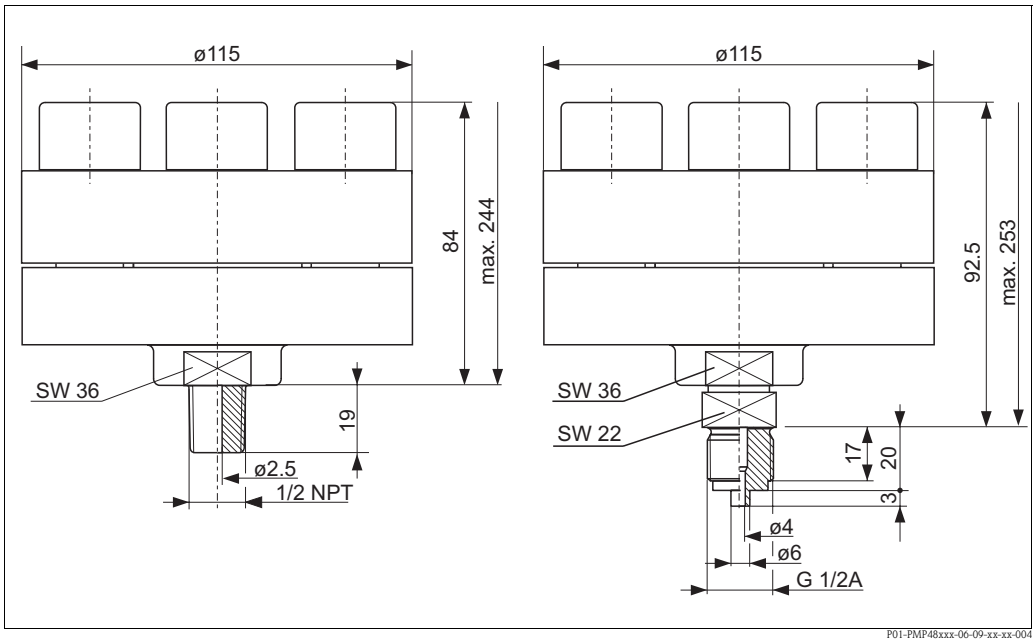

Process connection PMP48, versions "CA" and "DA", screwed, with integrated sealing lip, material AISI 316L

Version	Measuring range	Description	Nominal pressure	T_K Ambient	T_K Process	Diaphragm seal weight
				[mbar/10 K]		[kg]
CA	> 40 bar	ISO 228 G 1/2 A	PN 400	+3.45	+1.28	4.75
DA	> 40 bar	ANSI 1/2 MNPT	PN 400	+3.45	+1.28	4.75

Note!
With the use of high temperature oils the design can deviate strongly.
For further information please contact your local Endress+Hauser Sales Center.

EN/DIN flanges, connection dimensions as per EN 1092-1/DIN 2527 and DIN 2501-1

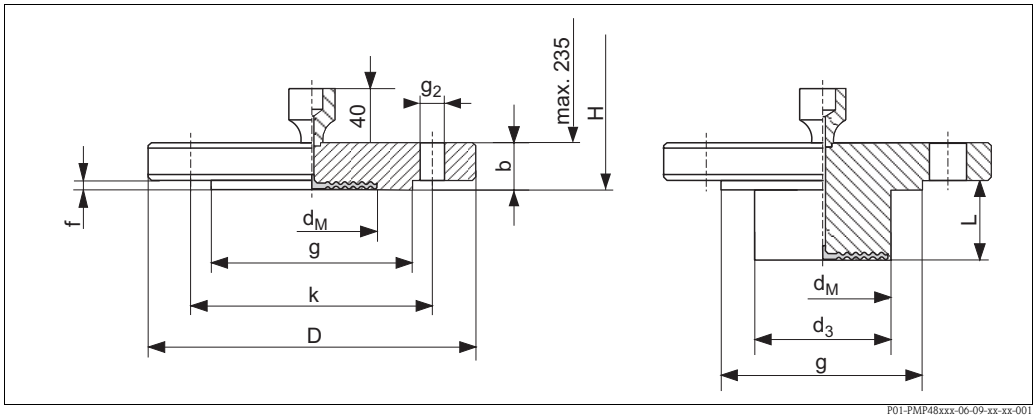

Process connection PMP48, EN/DIN flange with flush-mounted diaphragm, material AISI 316L

H max. installation height = 235 mm + flange thickness b (→ see Table)

	Flanges							Boltholes			Diaphragm seal			
Version	**Nominal diameter**	**Nominal pressure**	**Shape** [1]	**Diameter**	**Thickness**	**Raised face**		**Quantity**	**Diameter**	**Hole circle**	**Max. diaphragm diameter**	**T_K Ambient**	**T_K Process**	**Max. total weight**
				D	**b**	**g**	**f**		**g_2**	**k**	**d_M**			
				[mm]	[mm]	[mm]	[mm]		[mm]	[mm]	[mm]	[mbar/10 K]		[kg]
EB	DN 25	PN 10-40	B1 (D)	115	18	66	3	4	14	85	32	+16.03	+5.17	2.1
EC	DN 25	PN 63-160	E	140	24	68	2	4	18	100	28	+16.03	+5.17	2.5
ED	DN 25	PN 250	E	150	28	68	2	4	22	105	28	+16.03	+5.17	3.7
EF	DN 25	PN 400	E	180	38	68	2	4	26	130	28	+16.03	+5.17	7.0
EK	DN 50	PN 10-40	B1 (D)	165	20	102	3	4	18	125	59	+2.21	+1.15	3.0
EM	DN 50	PN 63	B2 (E)	180	26	102	3	4	22	135	59	+2.21	+1.15	4.6
EN	DN 50	PN 100-160	E	195	30	102	3	4	26	145	59	+2.21	+1.15	6.2
EP	DN 50	PN 250	E	200	38	102	3	8	26	150	59	+2.21	+1.15	7.7
ER	DN 50	PN 400	E	235	52	102	3	8	30	180	59	+2.21	+1.15	14.7
EU	DN 80	PN 10-40	B1 (D)	200	24	138	3.5	8	18	160	89	+0.19	+0.11	5.3
FK [2]	DN 50	PN 10-40	B1 (D)	165	20	102	3	4	18	125	47	+3.45	+1.67	[2]
GK [2]														
JK [2]														
FU [2]	DN 80	PN 10-40	B1 (D)	200	24	138	3.5	4	18	160	72	+0.19	+0.7	[2]
GU [2]														
JU [2]														

1) Designation as per DIN 2527 in brackets

2) Alternatively with 50 mm, 100 mom and 200 mm extended diaphragm seal, for extended diaphragm seal diameter and weight, see the following table

EN/DIN flanges, connection dimensions as per EN 1092-1/DIN 2527 and DIN 2501 (additional technical data)

Version	Nominal diameter	Nominal pressure	Extended diaphragm seal length L [mm]	Extended diaphragm seal diameter d_3 [mm]	Max. total weight [kg]
FK	DN 50	PN 10-40	50	48.3	4.4
GK	DN 50	PN 10-40	100	48.3	5.0
JK	DN 50	PN 10-40	200	48.3	5.6
FU	DN 80	PN 10-40	50	76	7.4
GU	DN 80	PN 10-40	100	76	7.9
JU	DN 80	PN 10-40	200	76	9.0

JIS flanges, connection dimensions as per JIS B 2220 BL, raised face RF

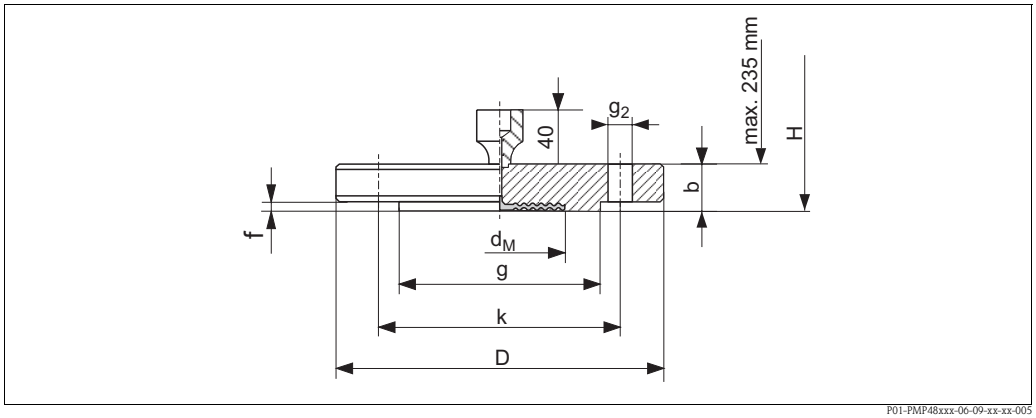

Process connection PMP48, JIS flange, material AISI 316L

H Max. installation height = 235 mm + flange thickness b (→ see Table)

	Flange						Boltholes			Diaphragm seal			
Version	Nominal diameter	Nominal pressure	Diameter D [mm]	Thickness b [mm]	Raised face diameter g [mm]	Raised face height f [mm]	Quantity	Diameter g_2 [mm]	Hole circle k [mm]	Max. diaphragm diameter d_M [mm]	T_K Ambient [mbar/10 K]	T_K Process [mbar/10 K]	Max. total weight [kg]
RB	25 A	10 K	125	14	67	1	4	19	90	32	+16.03	+5.17	2.7
RJ	50 A	10 K	155	16	96	2	4	19	120	59	+2.21	+1.15	2.5
RU	80 A	10 K	185	18	127	2	8	19	150	89	+0.19	+0.11	5.5

ANSI flanges B 16.5 RF

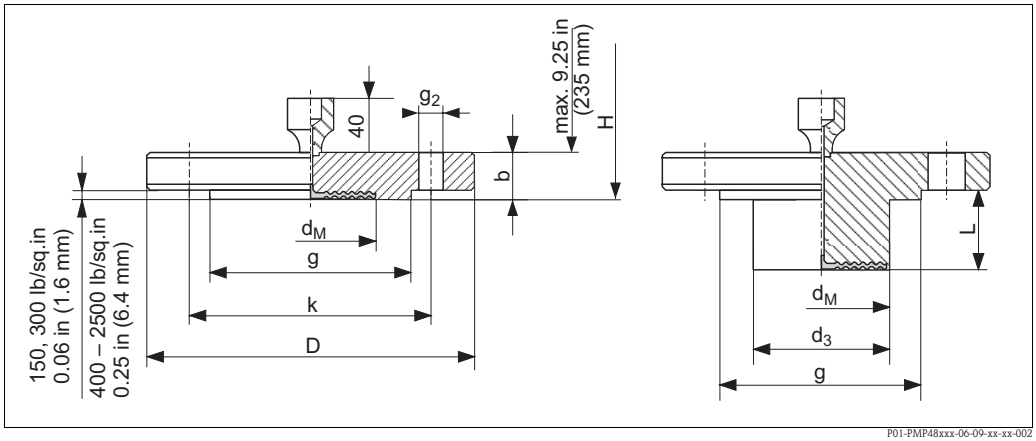

Process connection PMP48, ANSI flange B 16.5 RF with and without extended diaphragm seal

H Max. installation height = 235 mm + flange thickness b (→ see Table)

	Flange						Boltholes			Diaphragm seal			
Version	**Material**[1]	**Nominal diameter** [in]	**Class** [lb./sq.in]	**Diameter D** [in] *[mm]*	**Thickness b** [in] *[mm]*	**Raised face g** [in] *[mm]*	**Quantity**	**Diameter g_2** [in] *[mm]*	**Hole circle k** [in] *[mm]*	**Max. diaphragm diameter** [in] *[mm]*	**T_K Ambient** [mbar/10 K]	**T_K Process** [mbar/10 K]	**Max. total weight** [kg]
KB	AISI 316/ 316L[1]	1	150	4.25 *108*	0.56 *14.2*	2 *50.8*	4	0.62 *15.7*	3.12 *79.2*	1.26 *32*	+16.03	+5.17	2.4
KC	AISI 316/ 316L[1]	1	300	4.88 *124*	0.69 *17.5*	2 *50.8*	4	0.75 *19.1*	3.5 *88.9*	1.26 *32*	+16.03	+5.17	2.5
KD	AISI 316/ 316L[1]	1	400/ 600	4.88 *124*	0.69 *17.5*	2 *50.8*	4	0.75 *19.1*	3.5 *88.9*	1.26 *32*	+16.03	+5.17	2.6
KE	AISI 316/ 316L[1]	1	900/ 1500	5.88 *149.4*	1.12 *28.4*	2 *50.8*	4	1 *25.4*	4 *101.6*	1.26 *32*	+16.03	+5.17	5.0
KF	AISI 316/ 316L[1]	1	2500	6.25 *158.8*	1.38 *35.1*	2 *50.8*	4	1 *25.4*	4.25 *108*	1.26 *32*	+16.03	+5.17	5.8
KJ	AISI 316/ 316L[1]	2	150	6 *152.4*	0.75 *19.1*	3.62 *91.9*	4	0.75 *19.1*	4.75 *120.7*	2.32 *59*	+2.21	+1.15	3.4
KK	AISI 316/ 316L[1]	2	300	6.5 *165.1*	0.88 *22.4*	3.62 *91.9*	8	0.75 *19.1*	5 *127*	2.32 *59*	+2.21	+1.15	4.6
KL	AISI 316/ 316L[1]	2	400/ 600	6.5 *165.1*	1 *25.4*	3.62 *91.9*	8	0.75 *19.1*	5 *127*	2.32 *59*	+2.21	+1.15	5.3
KM	AISI 316/ 316L[1]	2	900/ 1500	8.5 *215.9*	1.5 *38.1*	3.62 *91.9*	8	1 *25.4*	6.5 *165.1*	2.32 *59*	+2.21	+1.15	11.5
KN	AISI 316/ 316L[1]	2	2500	9.25 *235*	2 *50.8*	3.62 *91.9*	8	1.12 *28.4*	6.75 *171.5*	2.32 *59*	+2.21	+1.15	17.0
KU	AISI 316/ 316L[1]	3	150	7.5 *190.5*	0.94 *23.9*	5 *127*	4	0.75 *19.1*	6 *152.4*	3.50 *89*	+0.19	+0.11	6.3
KV	AISI 316/ 316L[1]	3	300	8.25 *209.5*	1.12 *28.4*	5 *127*	8	0.75 *19.1*	6 *152.4*	3.50 *89*	+0.19	+0.11	8.2
KW	AISI 316/ 316L[1]	4	150	9 *228.6*	0.94 *23.9*	6.19 *157.2*	8	0.75 *19.1*	7.5 *190.5*	3.50 *89*	+0.19	+0.11	8.4
KX	AISI 316/ 316L[1]	4	300	10 *254*	1.25 *31.8*	6.19 *157.2*	8	0.88 *22.4*	7.88 *200.2*	3.50 *89*	+0.19	+0.11	12.9

	Flange						Boltholes			Diaphragm seal			
Version	**Material**	**Nominal diameter** [in]	**Class** [lb./sq.in]	**Diameter D** [in] *[mm]*	**Thickness b** [in] *[mm]*	**Raised face g** [in] *[mm]*	**Quantity**	**Diameter g_2** [in] *[mm]*	**Hole circle k** [in] *[mm]*	**Max. diaphragm diameter** [in] *[mm]*	**T_K Ambient** [mbar/10 K]	**T_K Process** [mbar/10 K]	**Total weight** [kg]
LJ[2]	AISI 316/ 316L [1]	2	150	6 *152.4*	0.75 *19.1*	3.62 *91.9*	4	0.75 *19.1*	4.75 *120.7*	1.85 *47*	+3.45	+1.67	[2]
MJ[2]													
NJ[2]													
LU[2]	AISI 316/ 316L[1]	3	150	7.5 *190.5*	0.94 *23.9*	5 *127*	4	0.75 *19.1*	6 *152.4*	2.83 *72*	+0.19	+0.7	[2]
MU[2]													
NU[2]													
LW[2]	AISI 316/ 316L[1]	4	150	9 *228.6*	0.94 *23.9*	6.19 *157.2*	8	0.75 *19.1*	7.5 *190.5*	3.50 *89*	+0.19	+0.11	[2]
MW[2]													
NW[2]													

1) Combination of AISI 316 for required pressure resistance and AISI 316L for required chemical resistance (dual rated).

2) Alternatively with 2", 4" and 6" extended diaphragm seal, for extended diaphragm seal diameter and weight, see the following table

ANSI flanges B 16.5 RF (additional technical data)

Version	**Nominal diameter** [in]	**Class** [lb./sq.in]	**Extended diaphragm seal length L** [in] *[(mm)]*	**Extended diaphragm seal diameter d_3** [in] *[(mm)]*	**Max. total weight** [kg]
LJ	2	150	*2 (50.8)*	*1.9 (48.3)*	4.2
MJ			*4 (101.6)*		4.6
NJ			*6 (152.4)*		5.1
LU	3	150	*2 (50.8)*	*2.99 (75.9)*	7.2
MU			*4 (101.6)*		7.8
NU			*6 (152.4)*		8.3
LW	4	150	*2 (50.8)*	*3.7 (94)*	9.8
MW			*4 (101.6)*		11.1
NW			*6 (152.4)*		12.4

Weight

- PMC41
  - Stainless steel housing with a raised cover: approx. 1.4 kg
  - Aluminum housing with a raised cover: approx. 1.6 kg
- PMC45
  - Stainless steel housing with a raised cover, threaded connection or hygienic connection: approx. 1.8 kg
  - Aluminum housing with a raised cover, threaded connection or hygienic connection: approx. 2.1 kg
  - → For devices with a flange, see Page 37 ff.
- PMP41
  - Stainless steel housing with a raised cover: approx. 0.9 kg
  - Aluminum housing with a raised cover: approx. 1.2 kg
- PMP45
  - Stainless steel housing with a raised cover: approx. 1.5 kg
  - Aluminum housing with a raised cover: approx. 1.8 kg
- PMP46
  - → See Page 45 ff, "Process connections PMP46".
- PMP48
  - → See Page 51 ff, "Process connections PMP48".

Material

- Housing:
  - Stainless steel: AISI 316L (1.4404) with surface roughness ≤ 0.8 µm
  - Die-cast aluminum with powder protective coating on polyester base
- Sight glass:
  - Non-hazardous area : polycarbonate (PC)
  - ATEX: II 1 G, II 1/2 G, II 2 G, II 1/2 GD Ex ia; II 3 G Ex nA; II 1/2 D Ex ia, II 1/3 D; FM: IS, DIP; CSA IS, Cl.II, GP; IECEx: Ex ia; TIIS: Ex ia; NEPSI: Ex ia: mineral glass
- Process diaphragm:
  - PMC41 and PMC45: Ceraphire®: Al_{2O3} aluminum oxide ceramic (FDA 21CFR186.1256, USP Class VI), ultrapure 99.9%
    (→ See also www.endress.com/ceraphire)
- Sealing ring for cover sealing:
  - Stainless steel housing: silicone covered in Teflon
  - Aluminum housing: NBR
- Nameplates:
  - Stainless steel housing: lasered onto the housing
  - Aluminum housing: AISI 304 (1.4301)
- Securing accessories: mounting bracket for pipe and wall mounting AISI 304 (1.4301)
- Capillary: AISI 316 Ti (1.4571)
- Protective hose for capillary: AISI 304 (1.4301)

→ For process connections, see Page 31 ff, "Mechanical construction" section.
→ For process diaphragms and filling oils, see Page 67 ff, "Ordering information" section.

Note!
No animal fats are used in the production of Cerabar M.

Process connections

- "Clamp connetions", "Aseptic couplings" and "Hygienic connections" and "Hygienic pipe diaphragm seal" (see also Chapter "Ordering information"): AISI 316L/1.4435
- "Threaded connection" and "DIN/EN flanges" (see also Chapter "Ordering information): stainless steel AISI 316L with the material number 1.4435 or 1.4404.
- With regard to their stability-temperature property, the materials 1.4435 and 1.4404 are grouped together under 13EO in EN 1092-1 Tab. 18. The chemical composition of the two materials can be identical.

Seals

- For universal process adapter 44mm: silicone molded seal FDA 21CFR177.2600/USP Class VI-70C.
- For all other seals, see Page 29, "Temperature operating range, seals" section.

Planning instructions for diaphragm seal systems

Applications

Diaphragm seal systems should be used if the process media and the device should be separated. Diaphragm seal systems offer clear advantages in the following instances:
- In the event of high process temperatures (→ see also Page 29, "Process temperature limits" section.)
- For aggressive media
- If good and rapid measuring point cleaning is necessary
- If the measuring point is exposed to vibrations
- For mounting locations that are difficult to access
- For very humid mounting locations

Planning instructions

Diaphragm seals are separating units between the measuring system and the fluid.

A diaphragm seal system consists of:
- A diaphragm seal
- A capillary tube where applicable
- Fill fluid
- A pressure transmitter.

The process pressure acts via the diaphragm seal membrane on the liquid-filled system, which transfers the process pressure via the capillary tube onto the sensor of the pressure transmitter.

Note!
The correlations between the individual diaphragm seal components are presented in the following section. For further information and comprehensive diaphragm seal system designs, please contact your local Endress+Hauser Sales Center.

Diaphragm seal

The diaphragm seal determines the application range of the system by
- The diaphragm diameter
- The diaphragms: stiffness and material
- The design (oil volume)

Diaphragm diameter

The larger the diaphragm diameter (less stiffness), the smaller the temperature effect on the measurement result.
Note: To keep the temperature effect in practice-oriented limits, you should select diaphragm seals with a nominal diameter ≥ DN 80, in as far as the process connection allows for it.

Diaphragm stiffness

The stiffness is dependent on the diaphragm diameter, the material, any available coating and the diaphragm thickness and shape. The diaphragm thickness and the shape are defined in construction. The stiffness of a diaphragm seal membrane influences the temperature operating range and the measuring error caused by temperature effects.

Capillary

Capillaries with an internal diameter of 1 mm are used as standard.
The capillary tube influences the T_K zero point, the ambient temperature operating range and the response time of a diaphragm seal system as a result of its length and internal diameter.
→ See also Page 61 ff, "Influence of the temperature on the zero point" and "Ambient temperature range" sections.
→ Observe the installation instructions regarding capillary tubes. See Page 65, "Installation instructions" section.

Filling oil

When selecting the filling oil, the fluid temperature and ambient temperature as well as the operating pressure are of crucial importance. Observe the temperatures and pressures during commissioning and cleaning. A further selection criterion is the compatibility of the filling oil with the requirements of the fluid. For example, only filling oils that are harmless to health – such as vegetable oil – can be used in the food industry.
→ See also the following section "Diaphragm seal filling oils".
The filling oil used influences the T_K zero point, the temperature operating range of a diaphragm seal system and the response time. → See also Page 61 ff, "Influence of the temperature on the zero point" section.

Pressure transmitter

The pressure transmitter influences the temperature operating range, the T_K zero point and the response time as a result of its volume change. The volume change is the volume that has to be shifted to pass through the complete measuring range.
Pressure transmitters from Endress+Hauser are optimized with regard to minimum volume change.

Diaphragm seal filling oils

Version[1]	Filling oil	Permitted temperature range [2] at 0.05 bar ≤ p_{abs} ≤ 1 bar	Permitted temperature range [2] at p_{abs} ≥ 1 bar	Density [g/cm³]	Viscosity [cSt at 25°C/ 77°F]	Expansion coefficient [1/K]	T_K correction factor	Notes
A, J, O, T	Silicone oil	–40 to +180°C (–40 to +356°F)	–40 to +250°C (–40 to +482°F)	0.96	100	0.00096	1	Suitable for foods FDA 21 CFR 175.105
G, H, K, R	High-temperature oil	–10 to +200°C (+14 to +392°F)	–10 to +400°C (+14 to +752°F)	1.07	37	0.0007	0.72	High temperatures
N, B, C	Inert oil	–40 to +80°C (–40 to +176°F)	–40 to +175°C (-40 to +347°F)	1.87	27	0.000876	0.91	Oil for ultrapure gas and oxygen applications
D, F, L [3], P, S	Vegetable oil	–10 to +120°C (+14 to +248°F)	–10 to +200°C (+14 to +392°F)	0.94	9.5	0.00101	1.05	Suitable for foods FDA 21 CFR 172.856
E	Glycerine	—	+15 to +200°C (+59 to +392°F)	1.26	1118	0.000615	0.64	Suitable for foods
M, U	Low temperature oil	–70 to +80°C –94 to +176°F	–70 to +180 °C	0.92	4.4	0.00108	1.12	Low temperatures

1) Version for feature 80 in the order code

2) Observe temperature limits of the device (→ Page 28 and Page 29)

3) Version "L" only for PMP46

Influence of the temperature on the zero point

A temperature change results in a volume change of the filling oil. The volume change depends on the expansion coefficient of the filling oil and the volume of the filling oil at calibration temperature (constant in the range: +21 to +33°C (+69.8 to 91.4°F)). → See also Page 60, "Diaphragm seal filling oils" section.
For example, the filling oil expands in the event of a temperature increase. The additional volume presses against the diaphragm seal membrane. The stiffer a diaphragm is, the greater its return force, which counteracts a volume change and acts on the measuring cell together with the operating pressure, thus shifting the zero point. For the temperature coefficients "T_K Process" and "T_K Ambient (for devices without capillaries)" see Page 45 ff, "Process connections PMP46 and PMP48" section.

The following diagrams illustrate the temperature coefficient "T_K Ambient" as a function of the capillary length. The following situation is illustrated: capillary and transmitter temperature (ambient temperature) change, the process temperature corresponds to the calibration temperature.
The temperature coefficients derived from the diagrams apply to silicone oil and diaphragm material AISI 316L/1.4435. For other filling oils, these temperature coefficients must be multiplied by the T_K correction factor of the corresponding filling oil. For the T_K correction factors, see this Page, "Diaphragm seal filling oils" section.
With regard to the temperature coefficient "T_K Ambient", devices with temperature isolators behave like devices with the same process connection with 1 m capillary.

Diagrams for diaphragm seal PMP46 with sample calculation

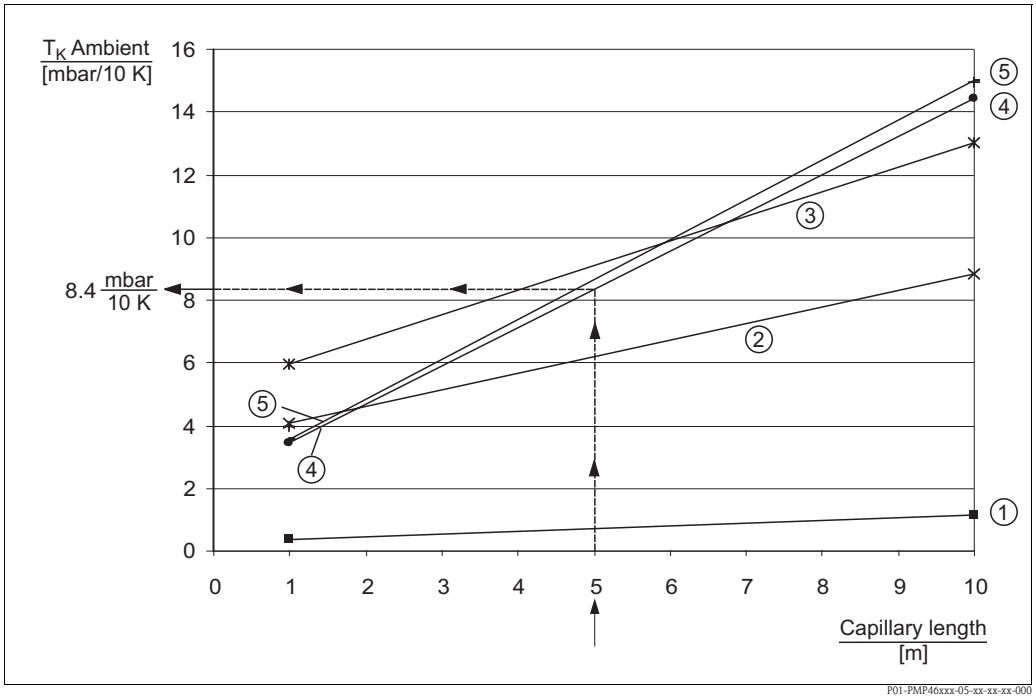

Diagram T_K Ambient as a function of the capillary length for PMP46

Example for:
– Diaphragm seal version "AL, DIN 11851 DN 50 PN 25, AISI 316L"
– Capillary length: 5 m
– Ambient temperature capillary/transmitter: 45 °C
– Filling oil: silicone oil

1. Select characteristic type for diaphragm seal version "AL" in accordance with the following table.
   Result: characteristic type 4
2. Determine value for T_K Ambient from the diagram.
   Result: 8.4 mbar/10 K
3. $T_{Ambient} - T_{Calibration}$ = 45 °C – 25 °C = 20 °C ⇒ 8.4 mbar/10 K x 20 K = 16.8 mbar

Result: In this example, the zero point is shifted 16.8 mbar.

Note!
- The influence of temperature on the zero point can be corrected through position adjustment.
- The temperature influence can be minimized by using a filling oil with a smaller expansion coefficient, a shorter capillary, a diaphragm seal with a larger diaphragm diameter or by using a smaller capillary internal diameter.

Characteristic type	Version [1)]	Diaphragm seal
①	DU	Tri-Clamp, ISO 2852 DN 76.1 (3"), AISI 316L
②	SL	Pipe diaphragm seal Tri-Clamp, ISO 2852 DN 51 (2"), AISI 316L
③	SG	Pipe diaphragm seal Tri-Clamp, ISO 2852 DN 38 (1 1/2"), AISI 316L
④	AL	DIN 11851 DN 50 PN 25, AISI 316L
	PL	Pipe diaphragm seal DIN 11581 DN 50 PN 25, AISI 316L
⑤	LL	Varivent type N for pipes DN 40 – DN 162, PN 40, AISI 316L
	KL	DRD DN50 (65 mm) PN 25, AISI 316L

1) Version for feature 70 "Process connection" in the order code

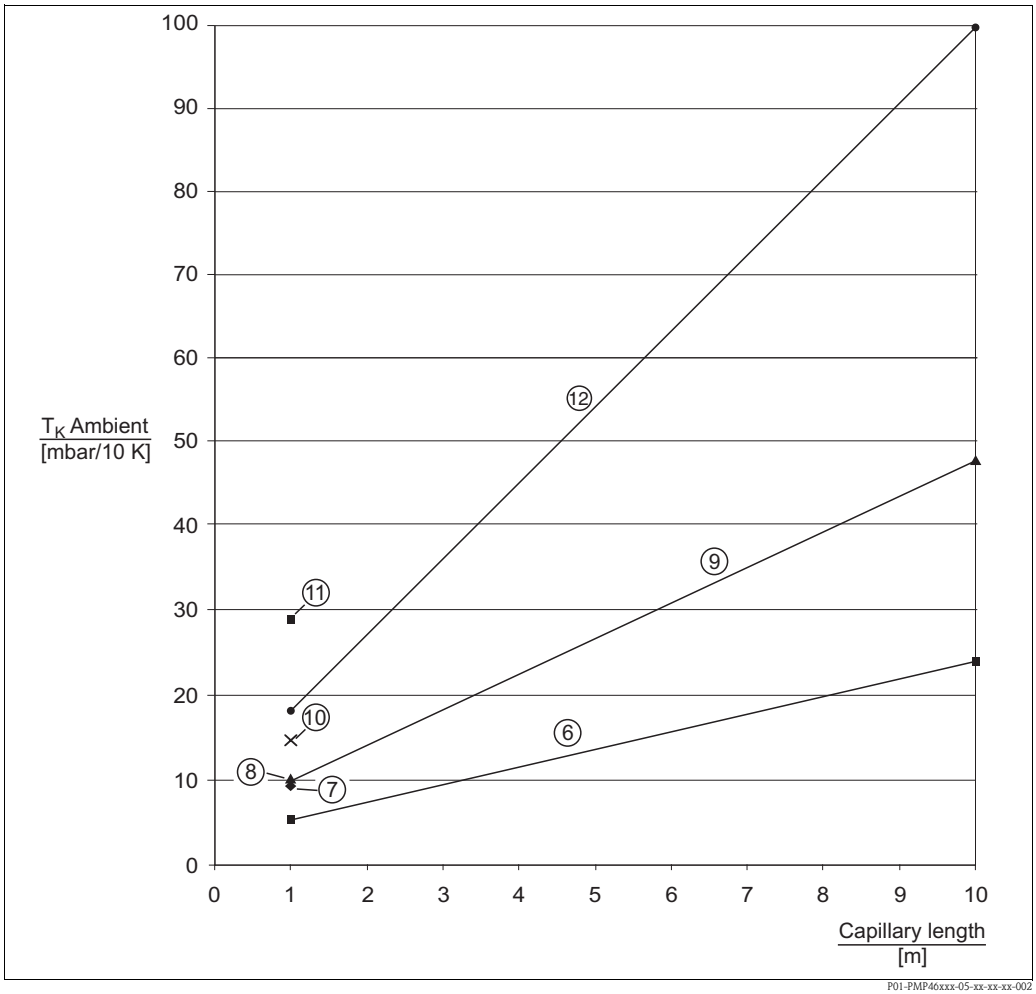

Diagram T_K Ambient as a function of the capillary length for PMP46

Characteristic type	Version [1)]	Diaphragm seal
⑥	DL	Tri-Clamp, ISO 2852 DN 51 (2"), DIN 32676 DN 50, AISI 316L
⑦ [2)]	SB	Pipe diaphragm seal Tri-Clamp, ISO 2852 DN 25 (1"), AISI 316L
	LB	Varivent type F for pipes DN 25 – DN 32 PN40, AISI 316L

Characteristic type	Version [1]	Diaphragm seal
⑧ [2]	AH	DIN 11851 DN 40, AISI 316L
	PH	Pipe diaphragm seal DIN 11851 DN 40 PN 40, AISI 316L/1.4435
⑨	EL	SMS 2" PN 25, AISI 316L
	FL	APV-RJT 2" PN 40, AISI316L
	GL	APV-ISS 2" PN 40, AISI316L
⑩ [2]	AG	DIN 11851 DN 32 PN 40, AISI 316L
	EG	SMS 1 1/2" PN 25, AISI 316L
	FG	APV-RJT 1 1/2" PN 40, AISI 316L
	GG	APV-ISS 1 1/2" PN 40, AISI 316L
	DG	Tri-Clamp, ISO 2852 DN 38 (1 1/2"), DIN 32676 DN 40, AISI 316L
⑪ [2]	PB	Pipe diaphragm seal DIN 11851 DN 25 PN 40, AISI 316L/1.4435
	DF	Tri-Clamp, ISO 2852 (1"), DIN 32676 DN 25, AISI 316L/1.435
⑫	SC	Tri-Clamp DN16 (3/4") RDM, 316L, EHEDG, 3A RDM = flow through seal

1) Version for feature 70 "Process connections" in the order code

2) Versions with 1 m (3 ft) capillary, see also feature 80 "Transmitter mounting; fill fluid"

Diagrams for diaphragm seal PMP48

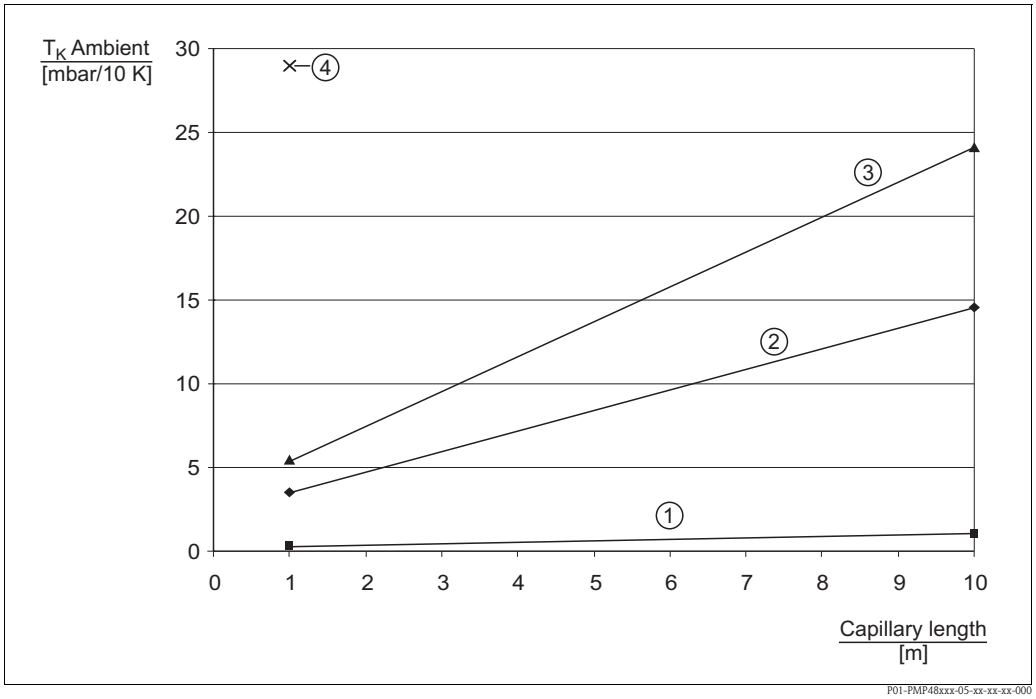

Diagram T_K Ambient as a function of the capillary length for PMP48

Characteristic type	Version [1)]	Diaphragm seal
①	EU	EN/DIN flange DN 80 PN 10-40 B1, AISI 316L
	RU	JIS flange 10K 80A RF, AISI 316L
	FU	EN flange DN 80 PN 10-40 B1, extended diaphragm seal: 50 mm, AISI 316L
	GU	EN flange DN 80 PN 10-40 B1, extended diaphragm seal: 100 mm, AISI 316L
	JU	EN flange DN 80 PN 10-40 B1, extended diaphragm seal: 200 mm, AISI 316L
	KU	ANSI flange 3" 150 lbs RF, AISI 316/316L
	KV	ANSI flange 3" 300 lbs RF, AISI 316/316L
	LU	ANSI flange 3" 150 lbs RF, extended diaphragm seal: 2", AISI 316/316L
	MU	ANSI flange 3" 150 lbs RF, extended diaphragm seal: 4", AISI 316/316L
	NU	ANSI flange 3" 150 lbs RF, extended diaphragm seal: 6", AISI 316/316L
	KW	ANSI flange 4" 150 lbs RF, AISI 316/316L
	KX	ANSI flange 4" 300 lbs RF, AISI 316/316L
	LW	ANSI flange 4" 150 lbs RF, extended diaphragm seal: 2", AISI 316/316L
	MW	ANSI flange 4" 150 lbs RF, extended diaphragm seal: 4", AISI 316/316L
	NW	ANSI flange 4" 150 lbs RF, extended diaphragm seal: 6", AISI 316/316L
②	EK	EN/DIN flange DN 50 PN 10-40 B1, AISI 316L
	EM	EN/DIN flange DN 50 PN 63 B2, AISI 316L
	EN	EN/DIN flange DN 50 PN 100/160 E, AISI 316L
	EP	EN/DIN flange DN 50 PN 250 E, AISI 316L
	ER	EN/DIN flange DN 50 PN 400 E, AISI 316L
	KJ	ANSI flange 2" 150 lbs RF, AISI 316/316L
	KK	ANSI flange 2" 300 lbs RF, AISI 316/316L
	KL	ANSI flange 2" 400/600 lbs RF, AISI 316/316L
	KM	ANSI flange 2" 900/1500 lbs RF, AISI 316/316L
	KN	ANSI flange 2" 2500 lbs RF, AISI 316/316L
	RJ	JIS flange 10K 50A RF, AISI 316L
③	FK	EN flange DN 50 PN10-40 B1, extended diaphragm seal: 50 mm, AISI 316L
	GK	EN flange DN 50 PN10-40 B1, extended diaphragm seal: 100 mm, AISI 316L
	JK	EN flange DN 50 PN10-40 B1, extended diaphragm seal: 200 mm, AISI 316L
	LJ	ANSI flange 2" 150 lbs, extended diaphragm seal: 2", AISI 316L
	MJ	ANSI flange 2" 150 lbs, extended diaphragm seal: 4", AISI 316L
	NJ	ANSI flange 2" 150 lbs, extended diaphragm seal: 6", AISI 316L

1) Version for feature 70 "Process connection" in the order code

Characteristic type	Version [1)]	Diaphragm seal
④ [2)]	EB	EN/DIN flange DN 25 PN 10-40 B1, AISI 316L
	EC	EN/DIN flange DN 25 PN 63-160 E, AISI 316L
	ED	EN/DIN flange DN 25 PN 250 E, AISI 316L
	EF	EN/DIN flange DN 25 PN 400 E, AISI 316L
	KB	ANSI flange 1" 150 lbs RF, AISI 316/316L
	KC	ANSI flange 1" 300 lbs RF, AISI 316/316L
	KD	ANSI flange 1" 400/600 lbs RF, AISI 316/316L
	KE	ANSI flange 1" 900/1500 lbs RF, AISI 316/316L
	KF	ANSI flange 1" 2500 lbs RF, AISI 316/316L
	RB	JIS flange 10K 25A RF, AISI 316L

1) Version for feature 70 "Process connections" in the order code

2) Versions with 1 m (3 ft) capillary, see also feature 80 "Transmitter mounting; fill fluid"

Ambient temperature range

The filling oil, capillary length, capillary internal diameter, process temperature and the oil volume of the diaphragm seal determine the ambient temperature range of the diaphragm seal system. The operating range can be extended by using a filling oil with a smaller expansion coefficient and by using a shorter capillary.

Installation instructions

Instructions for diaphragm seal systems

- The diaphragm seal together with the transmitter form a closed, calibrated system, which is filled through openings in the diaphragm seal and in the measurement system of the transmitter. These openings are sealed and must not be opened.
- In the case of devices with diaphragm seals and capillaries, the zero point shift caused by the hydrostatic pressure of the filling liquid column in the capillaries must be taken into account when selecting the measuring cell. If a measuring cell with a small measuring range is selected, the sensor nominal range can be violated as a result of position adjustment.
- For devices with a temperature isolator or capillary, a suitable fastening device (mounting bracket) is recommended.
- When using a mounting bracket, sufficient strain relief must be ensured in order to prevent the capillary from buckling (capillary bending radius ≥ 100 mm).

Installation instructions

In order to obtain more precise measurement results and to avoid a defect in the device, mount the capillaries as follows:
- Vibration-free (in order to avoid additional pressure fluctuations)
- Not in the vicinity of heating or cooling pipes
- Insulate if the ambient temperature is below or above the reference temperature
- With a bending radius of ≥ 100 mm.

Vacuum applications

For applications under vacuum, Endress+Hauser recommends mounting the pressure transmitter below the diaphragm seal. This prevents a vacuum load of the diaphragm seal caused by the presence of fill fluid in the capillary.

When the pressure transmitter is mounted above the diaphragm seal, the maximum height difference H1 – as illustrated in the following diagram – must not be exceeded. The maximum height difference depends on the density of the filling oil and the smallest ever pressure that is permitted to occur at the diaphragm seal (empty tank), see the following illustration on the right. Glycerine is not suitable for vacuum applications.

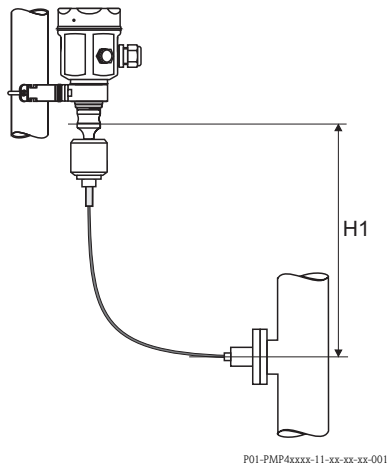

Installation above the diaphragm seal

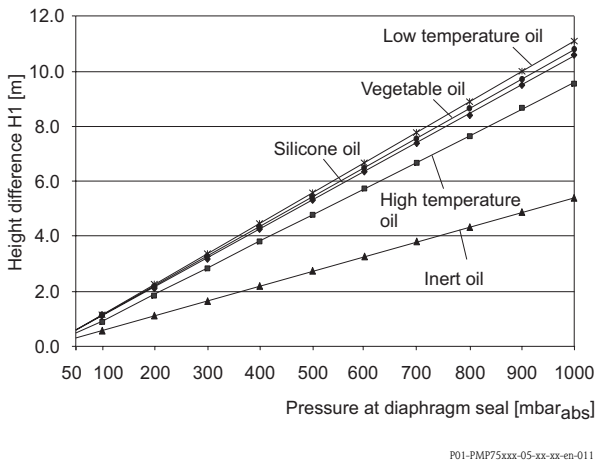

Diagram of maximum installation height above the diaphragm seal for vacuum applications

Certificates and approvals

CE mark

The device meets the legal requirements of the relevant EC directive.
Endress+Hauser confirms that the device has been tested successfully by attaching the CE mark.

Ex approvals

All explosion protection data are given in separate documentation which is available upon request. The Ex documentation is supplied as standard with all devices approved for use in hazardous areas.
→ See also Page 82 ff, "Safety conventions and icons" and "Installation/Control Drawings" sections.

Suitability for hygienic processes

The Cerabar M PMP45 and PMP46 is suitable for use in hygienic processes.
Overview of permitted process connections → Page 31 ff..
Many versions meet the requirements of 3A-Sanitary Standard No. 74.
Endress+Hauser confirms this by attaching the 3A symbol.

✎ Note!
Gap-free connections can be cleaned without residue using the usual cleaning methods.

CRN approval

Some device versions have a CRN approval. For a CRN-approved device, a CRN-approved process connection (→ see Page 31 feature 70 "Process connection") must be ordered together with a CSA approval (→ see Page 67 feature 10 "Approval"). PMP41 devices are not CRN-approved. The CRN-approved devices are fitted with a separate plate bearing the registration number 0F10525.5C.

Pressure Equipment Directive (PED)

- This measuring device corresponds to Article 3 (3) of the EC directive 97/23/EC (Pressure Equipment Directive) and has been designed and manufactured according to good engineering practice.
- PMP41 with threaded connection, PN > 200:
  suitable for stable gases in Group 1, Category I
- PMP46 with pipe diaphragm seal ≥ 1.5"/PN40 or DN40/PN40:
  suitable for stable gases in Group 1, Category II

Functional safety SIL 2/ IEC 61508/IEC 61511-1

The Cerabar M pressure transmitters with 4 to 20 mA HART electronics have been assessed by an independent body according to the IEC 61508/IEC 61511-1 standards. These devices can be used for monitoring process pressure up to SIL 2.
→ For a detailed description of safety functions with Cerabar M, settings and characteristic quantities for functional safety, see the "Functional Safety Manual – Cerabar M SD172P".

Standards and guidelines

DIN EN 60770 (IEC 60770):
Transmitters for use in industrial-process control systems
Part 1: Methods for performance evaluation

DIN 16086:
Electrical pressure measuring instruments - Pressure transmitters, pressure measuring instruments - Concepts, specifications on data sheets

EN 61326-X:
EMC product family standard for electrical equipment for measurement, control and laboratory use.

Ordering information

PMC41

This overview does not identify options which are mutually exclusive.

10	Approval:
R	For non-hazardous areas
G	ATEX II 1/2 G EEx ia IIC T6
F	ATEX II 1 G EEx ia IIC T6
H	ATEX II 2 G EEx ia IIC T6
N	ATEX II 3 G EEx nA II T5
J	ATEX II 1/2 G 1/2 D EEx ia IIC T6
K	ATEX II 1/2 D EEx ia IIC T6
L	ATEX II 1/3 D
C	CSA General Purpose
S	CSA IS, Class I, II, III Division 1, Groups A - G
T	CSA Class II, III, Division 1, Groups E – G (Dust Ex), Class I, Division 2, Groups A – D
P	FM IS, Class I, II, III, Division 1, Groups A – G
M	FM DIP, Class II, III Division 1, Groups E – G
D	IECEx Zone 1 Ex ia IIC T6
U	NEPSI Ex ia IIC T6
Y	Special version, to be specified

20	Housing; Electrical connection:
E1	316L; gland M20, IP 66
C1	316L; thread NPT 1/2, IP 66
G1	316L; thread G 1/2, IP 66
H1	316L; plug Han7D, IP 65
L1	316L; plug M12, IP 66 (in conjunction with absolute pressure sensors IP 68/NEMA 6P)
K1	316L; cable 5 m, IP 68 + atmospheric pressure compensation
E2	Alu; gland M20, IP 66
C2	Alu; thread NPT 1/2, IP 66
G2	Alu; thread G 1/2, IP 66
H2	Alu; plug Han7D, IP 65
L2	Alu; plug M12, IP 66 (in conjunction with absolute pressure sensors IP 68/NEMA 6P)
K2	Alu; cable 5 m, IP 68 + atmospheric pressure compensation
V2	Alu; valve plug M16 ISO4400, IP64
Y9	Special version, to be specified

30	Sensor range; MWP; OPL:		
	Sensor range	**MWP (maximum working pressure)**	**OPL (overpressure limit)**
	Sensors for overpressure		
1C	0 to 100 mbar/10 kPa/1.5 psi	2.7 bar/270 kPa/40 psi	4 bar/400 kPa/60 psi
1F	0 to 400 mbar/40 kPa/6 psi	5.3 bar/530 kPa/80 psi	8 bar/800 kPa/120 psi
1H	0 to 1 bar/100 kPa/15 psi	6.7 bar/670 kPa/100 psi	10 bar/1 MPa/150 psi
1M	0 to 4 bar/400 kPa/60 psi	16.7 bar/1.67 MPa/250 psi	25 bar/2.5 MPa/375 psi
1P	0 to 10 bar/1 MPa/150 psi	26.7 bar/2.67 MPa/400 psi	40 bar/4 MPa/600 psi
1S	0 to 40 bar/4 MPa/600 psi	40 bar/4 MPa/600 psi	60 bar/6 MPa/900 psi
	Sensors for negative overpressure		
5C	–100 to 100 mbar/-10 to 10 kPa/ -1.5 to 1.5 psi	2.7 bar/270 kPa/40 psi	4 bar/400 kPa/60 psi
5F	–400 to 400 mbar/–40 to 40 kPa/–6 to 6 psi	5.3 bar/530 kPa/80 psi	8 bar/800 kPa/120 psi
5H	–1 to 1 bar/–100 to 100 kPa/–15 to 15 psi	6.7 bar/670 kPa/100 psi	10 bar/1 MPa/150 psi
5M	–1 to 4 bar/–100 to 400 kPa/–15 to 60 psi	16.7 bar/1.67 MPa/250 psi	25 bar/2.5 MPa/375 psi
5P	–1 to 10 bar/–0.1 to 1 MPa/–15 to 150 psi	26.7 bar/2.67 MPa/400 psi	40 bar/4 MPa/600 psi
	Sensors for absolute pressure		
2F	0 to 400 mbar/40 kPa/6 psi absolute	5.3 bar/530 kPa/40 psi	8 bar/800 kPa/120 psi
2H	0 to 1 bar/100 kPa/15 psi absolute	6.7 bar/670 kPa/80 psi	10 bar/1 MPa/150 psi
2M	0 to 4 bar/400 kPa/60 psi absolute	16.7 bar/1.67 MPa/250 psi	25 bar/2.5 MPa/375 psi
2P	0 to 10 bar/1 MPa/150 psi absolute	26.7 bar/2.67 MPa/400 psi	40 bar/4 MPa/600 psi
2S	0 to 40 bar/4 MPa/600 psi absolute	40 bar/4 MPa/600 psi	60 bar/6 MPa/900 psi
9Y	Special version, to be specified		

40	Calibration; Unit:
1	0.2% sensor range; mbar/bar
2	0.2% sensor range; kPa/MPa
3	0.2 % sensor range; mmmH_2O/mH_2O
4	0.2% sensor range; inH_2O/ftH_2O
5	0.2% sensor range; kgf/cm^2
6	0.2% sensor range; psi

40				**Calibration; Unit:**						
				B	0.2% see additional specification					
				C	0.1% see additional specification					
				D	DKD certificate; see additional specification					
				9	Special version, to be specified					
50						**Output; Operation:**				
					A	4 to 20 mA analog; without display				
					C	4 to 20 mA analog; display bar graph				
					H	4 to 20 mA SIL HART; without display				
					J	4 to 20 mA SIL HART; display 4-digit + bar graph				
					P	PROFIBUS PA; without display				
					R	PROFIBUS PA; display 4-digit + bar graph				
					W	Without electronics; without display				
					Y	Special version, to be specified				
60							**Additional option:**			
						1	Basic version			
						2	Mounting bracket, wall/pipe			
						B	SIL + EN10204-3.1 material (process connection) inspection certificate SIL Declaration of Conformity			
						C	EN10204-3.1 material (process connection) inspection certificate			
						S	GL (German Lloyd) marine certificate			
						U	SIL Declaration of Conformity			
						Y	Special version, to be specified			
70								**Process connection:**		
									Threaded connection	
								1M	Thread ISO228 G1/2, 316L (CRN)	
								2M	Thread ISO228 G1/2, Alloy C (CRN)	
								1R	Thread ISO228 G1/2 hole 11.4 mm, 316L (CRN)	
								1P	Thread ISO228 G1/2 G1/4 (female), 316L (CRN)	
								1A	Thread ANSI MNPT 1/2 hole 11.4 mm, 316L (CRN)	
								1N	Thread ANSI MNPT 1/2 FNPT1/4, 316L (CRN)	
								2N	Thread ANSI MNPT 1/2 FNPT1/4 , Alloy C (CRN)	
								1S	Thread JIS B0202 G1/2 (male), 316L	
								1K	Thread JIS B0203 R1/2 (male) hole 11.4 mm, 316L	
								1T	Thread DIN 13 M20x1.5, AISI 316L	
								9Y	Special version, to be specified	
80									**Sensor seal:**	
									1	FKM Viton
									2	NBR
									4	EPDM
									C	Chemraz
									7	Kalrez
									M	Kalrez, cleaned for silicone-free service
									A	FKM Viton, cleaned from oil + grease
									L	FKM Viton, cleaned for silicone-free service
									6	FKM Viton, oxygen service$_2$ note application limits pressure/temp
									9	Special version, to be specified
PMC41										Complete order code

PMC45

This overview does not identify options which are mutually exclusive.

10	Approval:
R	For non-hazardous areas
G	ATEX II 1/2 G EEx ia IIC T6
F	ATEX II 1 G EEx ia IIC T6
H	ATEX II 2 G EEx ia IIC T6
N	ATEX II 3 G EEx nA II T5
S	CSA IS, Class I, II, III Division 1, Groups A – D, G + coal dust
P	FM IS, Class I, II, III, Division 1, Groups A – G
D	IECEx Zone 1 Ex ia IIC T6
U	NEPSI Ex ia IIC T6
Y	Special version, to be specified

20	Housing; Electrical connection:
E1	316L; gland M20, IP 66
C1	316L; thread NPT 1/2, IP 66
G1	316L; thread G 1/2, IP 66
H1	316L; plug Han7D, IP 65
L1	316L; plug M12, IP 66 (in conjunction with absolute pressure sensors IP 68/NEMA 6P)
K1	316L; cable 5 m, IP 68 + atmospheric pressure compensation
E2	Alu; gland M20, IP 66
C2	Alu; thread NPT 1/2, IP 66
G2	Alu; thread G 1/2, IP 66
H2	Alu; plug Han7D, IP 65
L2	Alu; plug M12, IP 66 (in conjunction with absolute pressure sensors IP 68/NEMA 6P)
K2	Alu; cable 5 m, IP 68 + atmospheric pressure compensation
V2	Alu; valve plug M16 ISO4400, IP64
Y9	Special version, to be specified

30	Sensor range; MWP; OPL:		
	Sensor range	**MWP (maximum working pressure)**	**OPL (overpressure limit)**
	Sensors for overpressure		
1C	0 to 100 mbar/10 kPa/1.5 psi	2.7 bar/270 kPa/40 psi	4 bar/400 kPa/60 psi
1F	0 to 400 mbar/40 kPa/6 psi	5.3 bar/530 kPa/80 psi	8 bar/800 kPa/120 psi
1H	0 to 1 bar/100 kPa/15 psi	6.7 bar/670 kPa/100 psi	10 bar/1 MPa/150 psi
1M	0 to 4 bar/400 kPa/60 psi	16.7 bar/1.67 MPa/250 psi	25 bar/2.5 MPa/375 psi
1P	0 to 10 bar/1 MPa/150 psi	26.7 bar/2.67 MPa/400 psi	40 bar/4 MPa/600 psi
1S	0 to 40 bar/4 MPa/600 psi	40 bar/4 MPa/600 psi	60 bar/6 MPa/900 psi
	Sensors for negative overpressure		
5C	–100 to 100 mbar/-10 to 10 kPa/ -1.5 to 1.5 psi	2.7 bar/270 kPa/40 psi	4 bar/400 kPa/60 psi
5F	–400 to 400 mbar/–40 to 40 kPa/–6 to 6 psi	5.3 bar/530 kPa/80 psi	8 bar/800 kPa/120 psi
5H	–1 to 1 bar/–100 to 100 kPa/–15 to 15 psi	6.7 bar/670 kPa/100 psi	10 bar/1 MPa/150 psi
5M	–1 to 4 bar/–100 to 400 kPa/–15 to 60 psi	16.7 bar/1.67 MPa/250 psi	25 bar/2.5 MPa/375 psi
5P	–1 to 10 bar/–0.1 to 1 MPa/–15 to 150 psi	26.7 bar/2.67 MPa/400 psi	40 bar/4 MPa/600 psi
	Sensors for absolute pressure		
2F	0 to 400 mbar/40 kPa/6 psi absolute	5.3 bar/530 kPa/40 psi	8 bar/800 kPa/120 psi
2H	0 to 1 bar/100 kPa/150 psi absolute	6.7 bar/670 kPa/80 psi	10 bar/1 MPa/150 psi
2M	0 to 4 bar/400 kPa/60 psi absolute	16.7 bar/1.67 MPa/250 psi	25 bar/2.5 MPa/375 psi
2P	0 to 10 bar/1 MPa/150 psi absolute	26.7 bar/2.67 MPa/400 psi	40 bar/4 MPa/600 psi
2S	0 to 40 bar/4 MPa/600 psi absolute	40 bar/4 MPa/600 psi	60 bar/6 MPa/900 psi
9Y	Special version, to be specified	40 bar/4 MPa/600 psi	60 bar/6 MPa/900 psi

40	Calibration; Unit:
1	0.2% sensor range; mbar/bar
2	0.2% sensor range; kPa/MPa
3	0.2 % sensor range; mmH_2O/mH_2O
4	0.2% sensor range; inH_2O/ftH_2O
5	0.2% sensor range; kgf/cm^2
6	0.2% sensor range; psi
B	0.2% see additional specification
C	0.1% see additional specification
D	DKD certificate; see additional specification
9	Special version, to be specified

50	Output; Operation:
A	4 to 20 mA analog; without display
C	4 to 20 mA analog; display bar graph

50		**Output; Operation:**
	H	4 to 20 mA SIL HART; without display
	J	4 to 20 mA SIL HART; display 4-digit + bar graph
	P	PROFIBUS PA; without display
	R	PROFIBUS PA; display 4-digit + bar graph
	W	Without electronics; without display
	Y	Special version, to be specified

60		**Additional option:**
	1	Basic version
	B	SIL + EN10204-3.1 mat. (process connection) inspection certificate SIL Declaration of Conformity
	C	EN10204-3.1 material (process connection) inspection certificate
	S	GL (German Lloyd) marine certificate
	U	SIL Declaration of Conformity
	9	Special version, to be specified

70		**Process connection:**
		Threaded connection
	AG	Thread ISO 228 G 1 1/2 , 316L
	AR	Thread ISO 228 G 2, 316L
	BF	Thread ANSI MNPT 1 1/2 , 316L (CRN)
	BR	Thread ANSI MNPT 2 , 316L (CRN)
	XK	Thread DIN 13 M44x1.25, 316L
		Clamp connections
	DL	Tri-Clamp, ISO 2852 DN 40-51 (2"), DIN 32676 DN 50, 316L, EHEDG, 3A with HNBR/E seal (CRN)
		Hygienic connections
	EG	SMS 1 1/2" PN 25, 316L, EHEDG, 3A with HNBR/EPDM seal
	EL	SMS 2" PN 25, 316L, EHEDG, 3A with HNBR/EPDM seal
	HL	APV-Inline DN 50 PN 40, EHEDG, 316L, 3A with HNBR/EPDM seal
	LB	Varivent F for pipes DN 25 – 32 PN 40, 316L, EHEDG, 3A with HNBR/EPDM seal (CRN)
	LL	Varivent N for pipes DN 40 – 162 PN 40, 316L, EHEDG, 3A with HNBR/EPDM seal (CRN)
	KL	DRD 65 mm PN 25, 316L, 3A with HNBR/EPDM seal
	AH	DIN 11851 DN 40 PN 40, 316L, EHEDG, 3A with HNBR/EPDM seal (CRN)
	AL	DIN 11851 DN 50 PN 25, 316L, EHEDG, 3A with HNBR/EPDM seal (CRN)
		Aseptic couplings
	AS	DIN 11864-1 A DN 40 pipe to DIN 11850, 316L, EHEDG, 3A with HNBR/EPDM seal
	AT	DIN 11864-1 A DN 50 pipe to DIN 11850, 316L, EHEDG, 3A with HNBR/EPDM seal
		EN flanges
	EK	DN 50 PN 10-40 B1, 316L, flange EN 1092-1 (DIN 2527 D)
	EU	DN 80 PN 10-40 B1, 316L, flange EN 1092-1 (DIN 2527 D)
	WK	DN 50 PN 10-40, ECTFE >316L, flange EN 1092-1 (DIN2527)
	WU	DN 80 PN 10-40, CTFE >316L, flange EN 1092-1 (DIN2527)
		ANSI flanges
	K1	1 1/2" 150 Ibs RF, 316/316L, flange ANSI B16.5 (CRN)
	K2	1 1/2" 300 Ibs RF, 316/316L, flange ANSI B16.5 (CRN)
	KJ	2" 150 Ibs RF, 316/316L, flange ANSI B16.5 (CRN)
	KK	2" 300 Ibs RF, 316/316L, flange ANSI B16.5 (CRN)
	KU	3" 150 Ibs RF, 316/316L, flange ANSI B16.5 (CRN)
	KV	3" 300 Ibs RF, 316/316L, flange ANSI B16.5 (CRN)
	KW	4" 150 Ibs RF, 316/316L, flange ANSI B16.5 (CRN)
	KX	4" 300 Ibs RF, 316/316L, flange ANSI B16.5 (CRN)
	VJ	2" 150 Ibs, ECTFE >316/316L, flange ANSI B16.5
	VU	3" 150 Ibs, ECTFE >316/316L, flange ANSI B16.5
	VN	4" 150 Ibs, ECTFE >316/316L, flange ANSI B16.5
	ZJ	2" 150 Ibs RF, PVDF, flange ANSI B16.5
	ZU	3" 150 Ibs RF, PVDF, flange ANSI B16.5
		JIS flange
	RI	10K 50 RF, 316L, flange JIS B2220
	RJ	10K 80 RF, 316L, flange JIS B2220
		Other
	HA	Universal adapter 44 mm, EHEDG, 316L incl. silicone molded seal (CRN)
	XU	Welding nozzle 75 mm, 316L
	YY	Special version, to be specified

80		**Sensor seal:**
	1	FKM Viton

80								**Sensor seal:**	
								2	HNBR (FDA)
								4	EPDM (FDA)
								C	Chemraz
								7	Kalrez
								M	Kalrez, cleaned for silicone-free service
								A	FKM Viton, cleaned from oil + grease
								L	FKM Viton, cleaned for silicone-free service
								9	Special version, to be specified

PMC45									Complete order code

PMP41

This overview does not identify options which are mutually exclusive.

10	Approval:
R	For non-hazardous areas
G	ATEX II 1/2 G EEx ia IIC T6
F	ATEX II 1 G EEx ia IIC T6
H	ATEX II 2 G EEx ia IIC T6
N	ATEX II 3 G EEx nA II T5
J	ATEX II 1/2 G 1/2 D EEx ia IIC T6
K	ATEX II 1/2 D EEx ia II T6
L	ATEX II 1/3 D
C	CSA General Purpose
S	CSA IS, Class I, II, III Division 1, Groups A - G
T	CSA Class II, III, Division 1, Groups E – G (Dust Ex); Class I, Division 2, Groups A – D
P	FM IS, Class I, II, III Division 1, Groups A - G
M	FM DIP, Class I, II, III Division 1, Groups E - G
D	IECEx Zone 1 Ex ia IIC T6
U	NEPSI Ex ia IIC T6
Y	Special version, to be specified

20	Housing; Electrical connection:
E1	316L; gland M20, IP 66
C1	316L; thread NPT 1/2, IP 66
G1	316L; thread G 1/2, IP 66
H1	316L; plug Han7D, IP 65
L1	316L; plug M12, IP 66 (in conjunction with absolute pressure sensors IP 68/NEMA 6P)
K1	316L; cable 5 m, IP 68 + atmospheric pressure compensation
E2	Alu; gland M20, IP 66
C2	Alu; thread NPT 1/2, IP 66
G2	Alu; thread G 1/2, IP 66
H2	Alu; plug Han7D, IP 65
L2	Alu; plug M12, IP 66 (in conjunction with absolute pressure sensors IP 68/NEMA 6P)
K2	Alu; cable 5 m, IP 68 + atmospheric pressure compensation
V2	Alu; valve connector M16 ISO 4400, IP 64
K2	Special version, to be specified

30	Sensor range; MWP; OPL:		
	Sensor range	**MWP (maximum working pressure)**	**OPL (overpressure limit)**
	Sensors for overpressure		
3H	0 to 1 bar/100 kPa/15 psi	2.7 bar/270 kPa/40 psi	4 bar/400 kPa/60 psi
3M	0 to 4 bar/400 kPa/60 psi	10.7 bar/1.07 MPa/160 psi	16 bar/1.6 MPa/240 psi
3P	0 to 10 bar/1 MPa/150 psi	26.7 bar/2.67 MPa/400 psi	40 bar/4 MPa/600 psi
3S	0 to 40 bar/4 MPa/600 psi	106.7 bar/10.67 MPa/ 1600 psi	160 bar/16 MPa/2400 psi
3U	0 to 100 bar/10 MPa/1500 psi	100 bar/10 MPa/ 1500 psi	400 bar/40 MPa/6000 psi
3Z	0 to 400 bar/40 MPa/6000 psi	400 bar/40 MPa/6000 psi	600 bar/60 MPa/9000 psi
	Sensors for negative overpressure		
7H	–1 to 1 bar/–100 to 100 kPa/–15 to 15 psi	2.7 bar/270 kPa/40 psi	4 bar/400 kPa/60 psi
7M	–1 to 4 bar/–100 to 400 kPa/–15 to 60 psi	10.7 bar/1.07 MPa/160 psi	16 bar/1.6 MPa/240 psi
7P	–1 to 10 bar/–0.1 to 1 MPa/–15 to 150 psi	26.7 bar/2.67 MPa/400 psi	40 bar/4 MPa/600 psi
	Sensors for absolute pressure		
4H	0 to 1 bar/100 kPa/15 psi absolute	2.7 bar/270 kPa/40 psi	4 bar/400 kPa/60 psi
4M	0 to 4 bar/400 kPa/60 psi absolute	10.7 bar/1.07 MPa/160 psi	16 bar/1.6 MPa/240 psi
4P	0 to 10 bar/1 MPa/150 psi absolute	26.7 bar/2.67 MPa/400 psi	40 bar/4 MPa/600 psi g
4S	0 to 40 bar/4 MPa/600 psi absolute	106.7 bar/10.67 MPa/ 1600 psi	160 bar/16 MPa/2400 psi
4U	0 to 100 bar/10 MPa/1500 psi absolute	100 bar/10 MPa/ 1500 psi	400 bar/40 MPa/6000 psi
4Z	0 to 400 bar/40 MPa/6000 psi absolute	400 bar/40 MPa/6000 psi	600 bar/60 MPa/9000 psi
9Y	Special version, to be specified		

40	Calibration; Unit:
1	0.2% sensor range; mbar/bar
2	0.2% sensor range; kPa/MPa
3	0.2 % sensor range; mmH_2O/mH_2O
4	0.2% sensor range; inH_2O/ftH_2O
5	0.2% sensor range; kgf/cm^2
6	0.2% sensor range; psi
B	0.2% see additional specification
C	0.1% see additional specification

40				**Calibration; Unit:**					
				D	DKD certificate; see additional specification				
				9	Special version, to be specified				
50					**Output; Operation:**				
					A	4 to 20 mA analog; without display			
					C	4 to 20 mA analog; display bar graph			
					H	4 to 20 mA SIL HART; without display			
					J	4 to 20 mA SIL HART; display 4-digit + bar graph			
					P	PROFIBUS PA; without display			
					R	PROFIBUS PA; display 4-digit + bar graph			
					W	Without electronics; without display			
					Y	Special version, to be specified			
60						**Additional option:**			
						1	Basic version		
						2	Mounting bracket, wall/pipe		
						C	EN10204-3.1 (wetted) inspection certificate		
						S	GL/RINA marine approval		
						B	SIL + EN10204-3.1 material (wetted parts) inspection certificate SIL Declaration of Conformity		
						U	SIL Declaration of Conformity		
						9	Special version, to be specified		
70							**Process connection:**		
								Threaded connection	
							1M	Thread ISO 228 G1/2, 316L	
							1D	Thread ISO 228 G1/2 seal O-ring, 316L, flush-mounted (adapter 52002643)	
							1F	Thread ISO 228 G1/2 seal DIN 3852, 316L, flush-mounted	
							1G	Thread ANSI MNPT 1/2 hole 11.4 mm, 316L	
							1X	Thread ANSI FNPT 1/2 , 316L	
							1S	Thread JIS B0202 G1/2 (male), 316L	
							1 K	Thread JIS B0203 R1/2 (male) bore 11.4 mm, AISI 316L	
							1T	Thread DIN13 M 20x1.5, AISI 316L	
							9Y	Special version, to be specified	
80								**Seal; Fill fluid:**	
								1	FKM Viton; synthetic oil
								4	FKM Viton, inert oil, cleaned from oil + grease
								F	NBR O-ring; synthetic oil
								H	FKM Viton O-ring; synthetic oil
								P	FTFE; synthetic oil
								A	Welded; mineral oil
								C	Welded; inert oil, oxygen service$_2$
								D	Welded, inert oil, cleaned from oil+grease
								9	Special version, to be specified
PMP41									Complete order code

PMP45

This overview does not identify options which are mutually exclusive.

10	Approval:
R	For non-hazardous areas
G	ATEX II 1/2 G EEx ia IIC T6
F	ATEX II 1 G EEx ia IIC T6
H	ATEX II 2 G EEx ia IIC T6
N	ATEX II 3 G EEx nA II T5
J	ATEX II 1/2 G 1/2D EEx ia IIC T6
K	ATEX II 1/2 D EEx ia IIC T6
L	ATEX II 1/3 D
C	CSA General Purpose
S	CSA IS, Class I, II, III Division 1, Groups A - G
T	CSA Class II, III, Division 1, Groups E – G (Dust Ex), Class I, Division 2, Groups A – D
P	FM IS, Class I, II, III, Division 1, Groups A – G
M	FM DIP, Class II, III Division 1, Groups E – G
D	IECEx Zone 1 Ex ia IIC T6
U	NEPSI EX ia IIC T6
Y	Special version, to be specified

20	Housing; Electrical connection:
E1	316L; gland M20, IP 66
C1	316L; thread NPT 1/2, IP 66
G1	316L; thread G 1/2, IP 66
H1	316L; plug Han7D, IP 65
L1	316L; plug M12, IP 66 (in conjunction with absolute pressure sensors IP 68/NEMA 6P)
K1	316L; cable 5 m, IP 68 + atmospheric pressure compensation
E2	Alu; gland M20, IP 66
E2	Alu; gland M20, IP 66
G2	Alu; thread G 1/2, IP 66
H2	Alu; plug Han7D, IP 65
L2	Alu; plug M12, IP 66 (in conjunction with absolute pressure sensors IP 68/NEMA 6P)
K2	Alu; cable 5 m, IP 68 + atmospheric pressure compensation
V2	Alu; valve connector M16 ISO 4400, IP 64
Y9	Special version, to be specified

30	Sensor range; MWP; OPL:		
	Sensor range	**MWP (maximum working pressure)**	**OPL (overpressure limit)**
	Sensors for overpressure		
3H	0 to 1 bar/100 kPa/15 psi	2.7 bar/270 kPa/40 psi	4 bar/400 kPa/60 psi
3M	0 to 4 bar/400 kPa/60 psi	10.7 bar/1.07 MPa/160 psi	16 bar/1.6 MPa/240 psi
3P	0 to 10 bar/1 MPa/150 psi	26.7 bar/2.67 MPa/400 psi	40 bar/4 MPa/600 psi
3S	0 to 40 bar/4 MPa/600 psi	106.7 bar/10.67 MPa/ 1600 psi	160 bar/16 MPa/2400 psi
3U	0 to 100 bar/10 MPa/1500 psi	100 bar/10 MPa/ 1500 psi	400 bar/40 MPa/6000 psi
3Z	0 to 400 bar/40 MPa/6000 psi	400 bar/40 MPa/6000 psi	600 bar/60 MPa/9000 psi
	Sensors for negative overpressure		
7H	–1 to 1 bar/–100 to 100 kPa/–15 to 15 psi	2.7 bar/270 kPa/40 psi	4 bar/400 kPa/60 psi
7M	–1 to 4 bar/–100 to 400 kPa/–15 to 60 psi	10.7 bar/1.07 MPa/160 psi	16 bar/1.6 MPa/240 psi
7P	–1 to 10 bar/–0.1 to 1 MPa/–15 to 150 psi	26.7 bar/2.67 MPa/400 psi	40 bar/4 MPa/600 psi
	Sensors for absolute pressure		
4H	0 to 1 bar/100 kPa/15 psi absolute	2.7 bar/270 kPa/40 psi	4 bar/400 kPa/60 psi
4M	0 to 4 bar/400 kPa/60 psi absolute	10.7 bar/1.07 MPa/160 psi	16 bar/1.6 MPa/240 psi
4P	0 to 10 bar/1 MPa/150 psi absolute	26.7 bar/2.67 MPa/400 psi	40 bar/4 MPa/600 psi g
4S	0 to 40 bar/4 MPa/600 psi absolute	106.7 bar/10.67 MPa/ 1600 psi	160 bar/16 MPa/2400 psi
4U	0 to 100 bar/10 MPa/1500 psi absolute	100 bar/10 MPa/ 1500 psi	400 bar/40 MPa/6000 psi
4Z	0 to 400 bar/40 MPa/6000 psi absolute	400 bar/40 MPa/6000 psi	600 bar/60 MPa/9000 psi
9Y	Special version, to be specified		

40	Calibration; Unit:
1	0.2% sensor range; mbar/bar
2	0.2% sensor range; kPa/MPa
3	0.2 % sensor range; mmH_2O/mH_2O
4	0.2% sensor range; inH_2O/ftH_2O
5	0.2% sensor range; kgf/cm^2
6	0.2% sensor range; psi
B	0.2% see additional specification
C	0.1% see additional specification

40				**Calibration; Unit:**					
				D	DKD certificate; see additional specification				
				9	Special version, to be specified				
50					**Output; Operation:**				
					A	4 to 20 mA analog; without display			
					C	4 to 20 mA analog; display bar graph			
					H	4 to 20 mA SIL HART; without display			
					J	4 to 20 mA SIL HART; display 4-digit + bar graph			
					P	PROFIBUS PA; without display			
					R	PROFIBUS PA; display 4-digit + bar graph			
					W	Without electronics; without display			
					Y	Special version, to be specified			
60						**Additional option:**			
						1	Basic version		
						C	EN10204-3.1 (wetted) inspection certificate		
						S	GL (German Lloyd) marine certificate		
						U	SIL Declaration of Conformity		
						B	SIL + EN10204-3.1 material (wetted parts) inspection certificate SIL Declaration of Conformity		
						9	Special version, to be specified		
70							**Process connection:**		
								Threaded connection	
							CD	Thread ISO 228 G1 seal metal joint, 316L, flush-mounted, adapter 52005087	
							BB	Thread ANSI MNPT 3/4, 316L, flush-mounted (CRN)	
								Clamp connections	
							DA	Clamp ISO 2852 DN 22 (3/4"), 316L, EHEDG, 3A, DIN 32676 DN 20 (CRN)	
							DB	Tri-Clamp, ISO 2852 DN 25 – 38 (1 to 1 1/2"), 316L, EHEDG, 3A, DIN 32676 DN 25 - 40 (CRN)	
							DL	Tri-Clamp, ISO 2852 DN 40 – 51 (2"), 316L, EHEDG, 3A, DIN 32676 DN50 (CRN)	
								Hygienic connections	
							EB	SMS 1" PN 25, 316L, EHEDG, 3A	
							EG	SMS 1 1/2" PN 25, 316L, EHEDG, 3A	
							LB	Varivent F for pipes DN 25 – 32 PN 40, 316L, EHEDG, 3A (CRN)	
							LG	Varivent B for pipes DN 10 – 15 PN 40, AISI 316L, EHEDG, 3A (CRN)	
							AB	DIN 11851 DN 25 PN 40, 316L, EHEDG, 3A (CRN)	
							MJ	KingGage 1777-2 (short), 316L, 3A	
							MK	KingGage 1777-2 (middle), 316L, 3A	
							ML	KingGage 1777-2 (long), 316L, 3A	
							YY	Special version, to be specified	
80								**Diaphragm, Fill fluid:**	
								A	316L, synthetic oil
								F	316L, synthetic oil (FDA)
								Y	Special version, to be specified
PMP45									Complete order code

PMP46

This overview does not identify options which are mutually exclusive.

10	Approval:
R	For non-hazardous areas
G	ATEX II 1/2 G EEx ia IIC T6
F	ATEX II 1 G EEx ia IIC T6
H	ATEX II 2 G EEx ia IIC T6
N	ATEX II 3 G EEx nA II T5
J	ATEX II 1/2 G 1/2D EEx ia IIC T6
K	ATEX II 1/2 D EEx ia IIC T6
L	ATEX II 1/3 D
C	CSA General Purpose
S	CSA IS, Class I, II, III Division 1, Groups A - G
T	CSA Class II, III, Division 1, Groups E – G (Dust Ex), Class I, Division 2, Groups A – D
P	FM IS, Class I, II, III, Division 1, Groups A – G
M	FM DIP, Class II, III Division 1, Groups E – G
D	IECEx Zone 1 Ex ia IIC T6
U	NEPSI Ex ia IIC T6
Y	Special version, to be specified

20	Housing; Electrical connection:
E1	316L; gland M20, IP 66
C1	316L; thread NPT 1/2, IP 66
G1	316L; thread G 1/2, IP 66
H1	316L; plug Han7D, IP 65
L1	316L; plug M12, IP 66 (in conjunction with absolute pressure sensors IP 68/NEMA 6P)
K1	316L; cable 5 m, IP 68 + atmospheric pressure compensation
E2	Alu; gland M20, IP 66
C2	Alu; thread NPT 1/2, IP 66
G2	Alu; thread G 1/2, IP 66
H2	Alu; plug Han7D, IP 65
L2	Alu; plug M12, IP 66 (in conjunction with absolute pressure sensors IP 68/NEMA 6P)
K2	Alu; cable 5 m, IP 68 + atmospheric pressure compensation
V2	Alu; cable 5 m, IP 68 + atmospheric pressure compensation
Y9	Special version, to be specified

30	Sensor range; MWP; OPL:		
	Sensor range	**MWP (maximum working pressure)**	**OPL (overpressure limit)**
	Sensors for overpressure		
3H	0 to 1 bar/100 kPa/15 psi	2.7 bar/270 kPa/40 psi	4 bar/400 kPa/60 psi
3M	0 to 4 bar/400 kPa/60 psi	10.7 bar/1.07 MPa/160 psi	16 bar/1.6 MPa/240 psi
3P	0 to 10 bar/1 MPa/150 psi	26.7 bar/2.67 MPa/400 psi	40 bar/4 MPa/600 psi
3S	0 to 40 bar/4 MPa/600 psi	106.7 bar/10.67 MPa/ 1600 psi	160 bar/16 MPa/2400 psi
	Sensors for negative overpressure		
7H	–1 to 1 bar/–100 to 100 kPa/–15 to 15 psi	2.7 bar/270 kPa/40 psi	4 bar/400 kPa/60 psi
7M	–1 to 4 bar/–100 to 400 kPa/–15 to 60 psi	10.7 bar/1.07 MPa/160 psi	16 bar/1.6 MPa/240 psi
7P	–1 to 10 bar/–0.1 to 1 MPa/–15 to 150 psi	26.7 bar/2.67 MPa/400 psi	40 bar/4 MPa/600 psi
	Sensors for absolute pressure		
4H	0 to 1 bar/100 kPa/15 psi absolute	2.7 bar/270 kPa/40 psi	4 bar/400 kPa/60 psi
4M	0 to 4 bar/400 kPa/60 psi absolute	10.7 bar/1.07 MPa/160 psi	16 bar/1.6 MPa/240 psi
4P	0 to 10 bar/1 MPa/150 psi absolute	26.7 bar/2.67 MPa/400 psi	40 bar/4 MPa/600 psi g
4S	0 to 40 bar/4 MPa/600 psi absolute	106.7 bar/10.67 MPa/ 1600 psi	160 bar/16 MPa/2400 psi
9Y	Special version, to be specified		

40	Calibration; Unit:
1	0.2% sensor range; mbar/bar
2	0.2% sensor range; kPa/MPa
3	0.2 % sensor range; mmH_2O/mH_2O
4	0.2% sensor range; inH_2O/ftH_2O
5	0.2% sensor range; kgf/cm^2
6	0.2% sensor range; psi
B	0.2% see additional specification
D	DKD certificate; see additional specification
9	Special version, to be specified

50	Output; Operation:
A	4 to 20 mA analog; without display
C	4 to 20 mA analog; display bar graph

50		**Output; Operation:**
	H	4 to 20 mA HART; without display
	J	4 to 20 mA HART; 4-digit display + bar graph
	P	PROFIBUS PA; without display
	R	PROFIBUS PA; display 4-digit + bar graph
	W	Without electronics; without display
	Y	Special version, to be specified

60		**Additional option:**
	1	Basic version
	2	Mounting bracket, wall/pipe
	C	EN10204-3.1 material (wetted) inspection certificate
	P	Ra < 0.4 µm/15.75 µin (240 grit), electropolished + EN10204-3.1 material (wetted) inspection certificate; in conjunction with process connection versions "DG", "DL" and "LL" please order roughness test separetely
	S	GL (German Lloyd) marine certificate
	U	SIL Declaration of Conformity
	B	SIL + EN10204-31 material (wetted parts) inspection certificate, SIL Declaration of Conformity
	9	Special version, to be specified

70		**Process connection:**
		Clamp connections
	DF	Tri-Clamp, ISO 2852 DN 25 (1"), 316L, EHEDG, 3A, DIN 32676 DN 25 (CRN)
	DG	Tri-Clamp, ISO 2852 DN 38 (1 1/2"), 316L, EHEDG, 3A, DIN 32676 DN 40 (CRN)
	DL	Tri-Clamp, ISO 2852 DN 51 (2"), DIN, 316L, EHEDG, 3A, 32676 DN 50 (CRN)
	DU	Tri-Clamp, ISO 2852 DN 76.1 (3"), 316L, EHEDG, 3A (CRN)
		Clamp pipe diaphragm seal (RDM)
	SA	Tri-Clamp DN 10 (3/4") RDM, 316L, EHEDG, 3A, RDM = flow through seal (CRN)
	SB	Tri-Clamp ISO 2852 DN 25 (1") RDM, 316L, EHEDG, 3A, RDM = flow through seal (CRN)
	SC	Tri-Clamp DN16 (3/4") RDM, 316L, EHEDG, 3A RDM = flow through seal
	SG	Tri-Clamp, ISO 2852 DN 38 (1 1/2") RDM, 316L, EHEDG, 3A, 3.1 material + pressure test PED Cat. II, RDM = flow through seal (CRN)
	SL	Tri-Clamp ISO 2852 DN 51 (2") 316L, EHEDG, 3A, 3.1 material + pressure test PED Cat.II, RDM = flow through seal (CRN)
		Hygienic connections
	EG	SMS 1 1/2" PN 25, 316L, EHEDG, 3A
	EL	SMS 2" PN 25, 316L, EHEDG, 3A
	FG	APV-RJT 1 1/2" PN 40, 316L
	FL	APV-RJT 2" PN 40, 316L, 3A
	GG	APV-ISS 1 1/2" PN 40, 316L, 3A
	GL	APV-ISS 2" PN 40, 316L, 3A
	KL	DRD 65 mm PN 25, 316L, 3A
	LB	Varivent F for pipes DN 25 – 32 PN 40, 316L, EHEDG, 3A
	LL	Varivent N for pipes DN 40 – 162 PN 40, 316L, EHEDG, 3A
	AG	DIN 11851 DN 32 PN 40, 316L, EHEDG, 3A
	AH	DIN 11851 DN 40 PN 40, 316L, EHEDG, 3A
	AL	DIN 11851 DN 50 PN 25, 316L, EHEDG, 3A
		Hygienic pipe diaphragm seal (RDM)
	PB	DIN 11851 DN 25 PN 40 RDM, 316L, EHEDG, 3A, RDM = flow through seal
	PH	DIN 11851 DN 40 PN 40 RDM, 316L, EHEDG, 3A, 3.1 material + pressure test PED Cat. II, RDM = flow through seal
	YY	Special version, to be specified

80		**Transmitter mounting; Fill fluid:**
	A	Direct; silicone oil
	D	Direct; vegetable oil (FDA)
	E	Direct; glycerine
	N	Oxygen service$_2$; inert oil, note application limits pressure/temp.
	L	Temperature isolator 100 mm; vegetable oil (FDA)
	G	Temperature isolator 100 mm; high-temperature oil
	K	1 m capillary; high-temperature oil
	O	1 m capillary; silicone oil
	P	1 m capillary; vegetable oil (FDA)
	H	..... m capillary; high-temperature oil (capillary > 1 m, only as of DN 50/2"; capillary length: 1 – 10 m, price independent of length)
	M	..... m capillary; low-temperature oil (capillary > 1 m, only as of DN 50/2"; capillary length: 1 – 10 m, price independent of length)
	F	..... m capillary; vegetable oil (FDA) (capillary > 1 m, only as of DN 50/2"; capillary length: 1 – 10 m, price independent of length)

80								**Transmitter mounting; Fill fluid:**	
								J	..... m capillary; silicone oil (capillary > 1 m, only as of DN 50/2"; capillary length: 1 – 10 m, price independent of length)
								B	..... m capillary; inert oil
								R	..... ft capillary; high-temperature oil (capillary > 3 ft, only as of DN 50/2"; capillary length: 3 – 33 ft, price independent of length)
								U	..... ft capillary; low-temperature oil (capillary > 3 ft, only as of DN 50/2"; capillary length: 3 – 33 ft, price independent of length)
								S	..... ft capillary; vegetable oil (FDA) (capillary > 3 ft, only as of DN 50/2"; capillary length: 3 – 33 ft, price independent of length)
								T	..... ft capillary; silicone oil (capillary > 3 ft, only as of DN 50/2"; capillary length: 3 – 33 ft, price independent of length)
								C	..... ft capillary; inert oil (capillary > 3 ft, only as of DN 50/2"; capillary length: 3 – 33 ft, price independent of length)
								Y	Special version, to be specified

PMP46									Complete order code

PMP48

This overview does not identify options which are mutually exclusive.

10	Approval:
R	For non-hazardous areas
G	ATEX II 1/2 G EEx ia IIC T6
F	ATEX II 1 G EEx ia IIC T6
H	ATEX II 2 G EEx ia IIC T6
N	ATEX II 3 G EEx nA II T5
J	ATEX II 1/2 G 1/2D EEx ia IIC T6
K	ATEX II 1/2 D EEx ia IIC T6
L	ATEX II 1/3 D
C	CSA General Purpose
S	CSA IS, Class I, II, III Division 1, Groups A - G
T	CSA Class II, III, Division 1, Groups E – G (Dust Ex), Class I, Division 2, Groups A – D
P	FM IS, Class I, II, III, Division 1, Groups A – G
M	FM DIP, Class II, III Division 1, Groups E – G
D	IECEx Zone 1 Ex ia IIC T6
U	NEPSI Ex ia IIC T6
Y	Special version, to be specified

20	Housing; Electrical connection:
E1	316L; gland M20, IP 66
C1	316L; thread NPT 1/2, IP 66
G1	316L; thread G 1/2, IP 66
H1	316L; plug Han7D, IP 65
L1	316L; plug M12, IP 66 (in conjunction with absolute pressure sensors IP 68/NEMA 6P)
K1	316L; cable 5 m, IP 68 + atmospheric pressure compensation
E2	Alu; gland M20, IP 66
C2	Alu; thread NPT 1/2, IP 66
G2	Alu; thread G 1/2, IP 66
H2	Alu; plug Han7D, IP 65
L2	Alu; plug M12, IP 66 (in conjunction with absolute pressure sensors IP 68/NEMA 6P)
K2	Alu; cable 5 m, IP 68 + atmospheric pressure compensation
Y9	Special version, to be specified

30	Sensor range; MWP; OPL:		
	Sensor range	**MWP (maximum working pressure)**	**OPL (overpressure limit)**
	Sensors for overpressure		
3H	0 to 1 bar/100 kPa/15 psi	2.7 bar/270 kPa/40 psi	4 bar/400 kPa/60 psi
3M	0 to 4 bar/400 kPa/60 psi	10.7 bar/1.07 MPa/160 psi	16 bar/1.6 MPa/240 psi
3P	0 to 10 bar/1 MPa/150 psi	26.7 bar/2.67 MPa/400 psi	40 bar/4 MPa/600 psi
3S	0 to 40 bar/4 MPa/600 psi	106.7 bar/10.67 MPa/ 1600 psi	160 bar/16 MPa/2400 psi
3U	0 to 100 bar/10 MPa/1500 psi	100 bar/10 MPa/ 1500 psi	400 bar/40 MPa/6000 psi
3Z	0 to 400 bar/40 MPa/6000 psi	400 bar/40 MPa/6000 psi	600 bar/60 MPa/9000 psi
	Sensors for negative overpressure		
7H	–1 to 1 bar/–100 to 100 kPa/–15 to 15 psi	2.7 bar/270 kPa/40 psi	4 bar/400 kPa/60 psi
7M	–1 to 4 bar/–100 to 400 kPa/–15 to 60 psi	10.7 bar/1.07 MPa/160 psi	16 bar/1.6 MPa/240 psi
7P	–1 to 10 bar/–0.1 to 1 MPa/–15 to 150 psi	26.7 bar/2.67 MPa/400 psi	40 bar/4 MPa/600 psi
	Sensors for absolute pressure		
4H	0 to 1 bar/100 kPa/15 psi absolute	2.7 bar/270 kPa/40 psi	4 bar/400 kPa/60 psi
4M	0 to 4 bar/400 kPa/60 psi absolute	10.7 bar/1.07 MPa/160 psi	16 bar/1.6 MPa/240 psi
4P	0 to 10 bar/1 MPa/150 psi absolute	26.7 bar/2.67 MPa/400 psi	40 bar/4 MPa/600 psi g
4S	0 to 40 bar/4 MPa/600 psi absolute	106.7 bar/10.67 MPa/ 1600 psi	160 bar/16 MPa/2400 psi
4U	0 to 100 bar/10 MPa/1500 psi absolute	100 bar/10 MPa/ 1500 psi	400 bar/40 MPa/6000 psi
4Z	0 to 400 bar/40 MPa/6000 psi absolute	400 bar/40 MPa/6000 psi	600 bar/60 MPa/9000 psi
9Y	Special version, to be specified		

40	Calibration; Unit:
1	0.2% sensor range; mbar/bar
2	0.2% sensor range; kPa/MPa
3	0.2 % sensor range; mmH_2O/mH_2O
4	0.2% sensor range; inH_2O/ftH_2O
5	0.2% sensor range; kgf/cm^2
6	0.2% sensor range; psi
B	0.2% see additional specification
D	DKD certificate; see additional specification
9	Special version, to be specified

50						**Output; Operation:**		
					A	4 to 20 mA analog; without display		
					C	4 to 20 mA analog; display bar graph		
					H	4 to 20 mA SIL HART; without display		
					J	4 to 20 mA SIL HART; display 4-digit + bar graph		
					P	PROFIBUS PA; without display		
					R	PROFIBUS PA; display 4-digit + bar graph		
					W	Without electronics; without display		
					Y	Special version, to be specified		
60							**Additional option:**	
						1	Basic version	
						2	Mounting bracket, wall/pipe	
						C	EN10204-3.1 material (wetted) inspection certificate	
						S	GL (German Lloyd) marine certificate	
						U	SIL Declaration of Conformity	
						B	SIL + EN10204-3.1 material (wetted parts) inspection certificate, SIL Declaration of Conformity	
						Y	Special version, to be specified	
70								**Process connection:**
								Threaded connection
							CA	Thread ISO 228 G 1/2, 316L, separator
							AF	Thread ISO 228 G 1, 316L
							AG	Thread ISO 228 G 1 1/2, 316L
							AR	Thread ISO 228 G 2, 316L
							DA	Thread ANSI NPT 1/2, 316L, separator (CRN)
							BF	Thread ANSI NPT 1, 316L (CRN)
							BG	Thread ANSI NPT 1 1/2 , 316L (CRN)
							BR	Thread ANSI NPT 2, 316L (CRN)
								EN flanges
							EB	DN 25 PN 10 – 40 B1, 316L, flange EN10921-1 (DIN2527 D)
							EC	DN 25 PN 64 – 160 E, 316L, flange DIN2501
							ED	DN 25 PN 250 E, 316L, flange DIN2501
							EF	DN 25 PN 400 E, 316L, , flange DIN2501
							EK	DN 50 PN 10-40 B1, 316L, flange EN10921-1 (DIN2527 D)
							EM	DN 50 PN 63 B2, 316L, flange EN10921-1 (DIN2527 E)
							EN	DN 50 PN 100-160 E, 316L, flange DIN2501
							EP	DN 50 PN 250 E, 316L, flange DIN2501
							ER	DN 50 PN 400 E, 316L, flange DIN2501
							EU	DN 80 PN 10 – 40 B1, 316L, flange EN10921-1 (DIN2527 D)
								EN flanges with extended diaphragm seal
							FK	DN 50 PN 10 – 40 B1, 316L, 50 mm barrel (DIN2527 D)
							GK	DN 50 PN 10 – 40 B1, 316L, 100 mm barrel (DIN2527 D)
							JK	DN 50 PN 10 – 40 B1, 316L, 200 mm barrel (DIN2527 D)
							FU	DN 80 PN 10 – 40 B1, 316L, 50 mm barrel (DIN2527 D)
							GU	DN 80 PN 10 – 40 B1, 316L, 100 mm barrel (DIN2527 D)
							JU	DN 80 PN 10 – 40 B1, 316L, 200 mm barrel (DIN2527 D)
								ANSI flanges
							KB	1" 150 lbs RF, 316/316L, flange ANSI B16.5 (CRN)
							KC	1" 300 lbs RF, 316/316L, flange ANSI B16.5 (CRN)
							KD	1" 400/600 lbs RF, 316/316L, flange ANSI B16.5 (CRN)
							KE	1" 900/1500 lbs RF, 316/316L, flange ANSI B16.5 (CRN)
							KF	1" 2500 lbs RF, 316/316L, flange ANSI B16.5 (CRN)
							KJ	2" 150 lbs RF, 316/316L, flange ANSI B16.5 (CRN)
							KK	2" 300 lbs RF, 316/316L, flange ANSI B16.5 (CRN)
							KL	2" 400/600 lbs RF, 316/316L, flange ANSI B16.5 (CRN)
							KM	2" 900/1500 lbs RF, 316/316L, flange ANSI B16.5 (CRN)
							KN	2" 2500 lbs RF, 316/316L, flange ANSI B16.5 (CRN)
							KU	3" 150 lbs RF, 316/316L, flange ANSI B16.5 (CRN)
							KV	3" 300 lbs RF, 316/316L, flange ANSI B16.5 (CRN)
							KW	4" 150 lbs RF, 316/316L, flange ANSI B16.5 (CRN)
							KX	4" 300 lbs RF, 316/316L, flange ANSI B16.5 (CRN)
								ANSI flanges with extended diaphragm seal
							LJ	2" 150 lbs RF, 316/316L, 2" barrel, flange ANSI B16.5 (CRN)
							MJ	2" 150 lbs RF, 316/316L, 4" barrel, flange ANSI B16.5 (CRN)
							NJ	2" 150 lbs RF, 316/316L, 6" barrel, flange ANSI B16.5 (CRN)
							LU	3" 150 lbs RF, 316/316L, 2" barrel, flange ANSI B16.5 (CRN)
							MU	3" 150 lbs RF, 316/316L, 4" barrel, flange ANSI B16.5 (CRN)
							NU	3" 150 lbs RF, 316/316L, 6" barrel, flange ANSI B16.5 (CRN)

70							**Process connection:**			
							LW	4" 150 lbs RF, 316/316L, 2" barrel, flange ANSI B16.5 (CRN)		
							MW	4" 150 lbs RF, 316/316L, 4" barrel, flange ANSI B16.5 (CRN)		
							NW	4" 150 lbs RF, 316/316L, 6" barrel, flange ANSI B16.5 (CRN)		
								JIS flanges		
							RB	10K 25 RF, 316L, flange JIS B2220		
							RJ	10K 50 RF, 316L, flange JIS B2220		
							RU	10K 80 RF, 316L, flange JIS B2220		
							YY	Special version, to be specified		
80								**Transmitter mounting; Fill fluid:**		
								A	Direct; silicone oil	
								D	Direct; vegetable oil (FDA)	
								E	Direct; glycerine	
								N	Oxygen service$_2$; inert oil, note application limits pressure/temp.	
								G	Temperature isolator 100 mm; high-temperature oil	
								K	1 m capillary; high-temperature oil	
								P	1 m capillary; vegetable oil (FDA)	
								O	1 m capillary; silicone oil	
								B	..... m capillary; inert oil (capillary > 1 m, only as of DN 50/2"; Capillary length: 1 – 10 m, price independent of length)	
								H	..... m capillary; high-temperature oil (capillary > 1 m, only as of DN 50/2"; Capillary length: 1 – 10 m, price independent of length)	
								M	..... m capillary; low-temperature oil (capillary > 1 m, only as of DN 50/2"; Capillary length: 1 – 10 m, price independent of length)	
								F	..... m capillary; vegetable oil (FDA) (capillary > 1 m, only as of DN 50/2"; Capillary length: 1 – 10 m, price independent of length)	
								J	..... m capillary; silicone oil (capillary > 1 m, only as of DN 50/2"; Capillary length: 1 – 10 m, price independent of length)	
								C	..... ft capillary; inert oil (capillary > 3 ft, only as of DN 50/2"; Capillary length: 3 – 33 ft, price independent of length)	
								R	..... ft capillary; high-temperature oil (capillary > 3 ft, only as of DN 50/2"; Capillary length: 3 – 33 ft, price independent of length)	
								U	..... ft capillary; low-temperature oil (capillary > 3 ft, only as of DN 50/2"; Capillary length: 3 – 33 ft, price independent of length)	
								S	..... ft capillary; vegetable oil (FDA) (capillary > 3 ft, only as of DN 50/2"; Capillary length: 3 – 33 ft, price independent of length)	
								T	..... m capillary; silicone oil (capillary > 3 ft m, only as of DN 50/2"; Capillary length: 3 – 33 ft, price independent of length)	
								Y	Special version, to be specified	
90									**Diaphragm material:**	
									Extended diaphragm seal versions only as 316L	
									1	316L
									2	Alloy C276
									5	Tantalum
									7	316L with 0.09 PTFE foil (not for vacuum applications)
									8	316L with 0.25 PTFE foil (not for vacuum applications)
									Y	Special version, to be specified
PMP48										Complete order code

Additional Documentation

Field of Activities

- Pressure measurement, powerful measuring instruments for process pressure, differential pressure, level and flow: FA004P/00/en

Technical Information

- EMC test procedures TI241F/00/en

Operating Instructions

- Cerabar M (4 to 20 mA analog): BA200P/00/en
- Cerabar M (4 to 20 mA HART): BA201P/00/en
- Cerabar M (PROFIBUS PA): BA222P/00/en

Functional Safety Manual (SIL)

- Cerabar M (4 to 20 mA HART): SD172P/00/en

Safety conventions and icons

Certificate/ Type of Protection	Device	Electronic insert	Documentation
ATEX II 1 G EEx ia IIC T6	PMC41, PMC45, PMP41, PMP45, PMP46, PMP48	– 4 to 20 mA HART – PROFIBUS PA	– XA297P – XA311P
ATEX II 1/2 G EEx ia IIC T6 or ATEX II 2 G EEx ia IIC T6	PMC41, PMC45, PMP41, PMP45, PMP46, PMP48	– 4 to 20 mA – 4 to 20 mA HART – PROFIBUS PA	– XA039P – XA039P – XA096P
ATEX II 1/2 G 1/2 D EEx ia IIC T6	PMC41, PMP41, PMP45, PMP46, PMP48	– 4 to 20 mA HART – PROFIBUS PA	– XA309P – XA310P
ATEX II 1/3 D	PMC41, PMP41, PMP45, PMP46, PMP48	– 4 to 20 mA – 4 to 20 mA HART – PROFIBUS PA	– XA040P – XA040P – XA098P
ATEX II 3 G EEx nA II T5	PMC41, PMC45, PMP41, PMP45, PMP46, PMP48	– 4 to 20 mA – 4 to 20 mA HART – PROFIBUS PA	– XA052P – XA052P – XA052P
ATEX II 1/2 D EEx ia T6	PMC41, PMP41, PMP45, PMP46, PMP48	– 4 to 20 mA HART – PROFIBUS PA	– XA038P – XA097P

Certificate/ Type of Protection	Device	Electronic insert	Documentation
IECEx Zone 1 Ex ia IIC T6	PMC41, PMC45, PMP41, PMP45, PMP46, PMP48	– 4 to 20 mA HART	– XB013P

Certificate/ Type of Protection	Device	Electronic insert	Documentation
NEPSI Ex ia IIC T6	PMC41, PMC45, PMP41, PMP45, PMP46, PMP48	– 4 to 20 mA HART, PROFIBUS PA	– XA419P

Installation/Control Drawings

Certificate/ Type of Protection	Device	Electronic insert	Documentation
FM IS Class I, II, III, Division 1, Groups A – G	PMC41, PMC45, PMP41, PMP45, PMP46, PMP48	– 4 to 20 mA – 4 to 20 mA HART – PROFIBUS PA	– ZD039P – ZD039P – ZD052P
CSA IS Class I, II, III, Division 1, Groups A – G	PMC41, PMC45, PMP41, PMP45, PMP46, PMP48	– 4 to 20 mA – 4 to 20 mA HART – PROFIBUS PA	– ZD040P – ZD040P – ZD051P

Instruments International

Endress+Hauser
Instruments International AG
Kaegenstrasse 2
4153 Reinach
Switzerland

Tel. +41 61 715 81 00
Fax +41 61 715 25 00
www.endress.com
info@ii.endress.com

Endress+Hauser
People for Process Automation

TI399P/00/en/06.08
71064497
CCS/FM+SGML 6.0

71064497