Bourdon Tube Switch

Series B1S, B2S, B1T, B2T

Features

- High accuracy
- High pressure up to 18,000 psi
- Tamper-proof external adjustment
- Single and dual switching capability
- Water tight housing versions available (NEMA 4)

Applications

- Oil & gas
- Medical applications
- Mining
- Compressors
- Power plants
- Water pumps
- Hydraulic power units
- Pneumatic devices
- General industrial applications

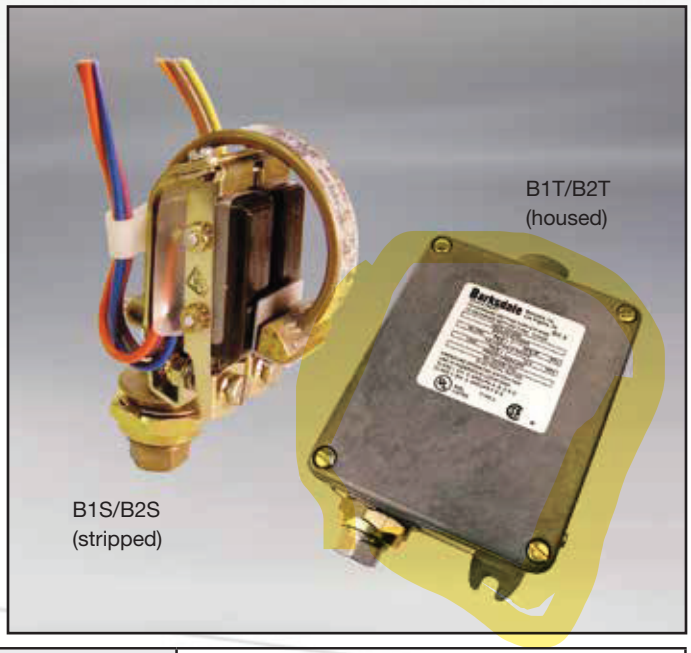

General Specifications*

Electrical Characteristics:	All models incorporate Underwriters Laboratories, Inc. and CSA Listed single pole double throw snap-action switching elements.
Accuracy[1]:	± 1% of the adjustable range
Switch: Type: Rating:	 Single pole double throw (SPDT) snap action; single or dual circuit 10 amp @ 125/250 VAC 3 amp @ 480 VAC 0.5 amp @ 24 VDC
Wetted Parts: Process Fitting & Bourdon Tube: Enclosure:	 316 series stainless steel Anodized aluminum
Electrical Connection: Stripped Model: Housed Model:	 21” Free Leads Internal terminal strip via conduit connection
Enclosure Ratings: Housed Model:	 NEMA 4

Pressure Connection:	Housed models with proof pressure up to 7,200 psi and stripped models with proof pressure up to 6,000 psi; 1/4” NPT female; All higher pressure ranges: superpressure fitting for 1/4” O.D. tube.
Approvals: UL/CSA (optional):	 UL File E42816 CSA: Class 3231 02; File No. 022355-0.000
Temperature Range: Operating:	 -40° to +165°F (-40° to +74 °C)
Adjustment Instructions:	Remove protective hex cap to remove adjustment screw. Turn main unit adjustment screw clockwise to lower setpoint, counterclockwise to raise setpoint. For optional adjustable actuation value (deadband) models, set the desired DECREASING setpoint first and then turn microswitch adjustment wheel counterclockwise to increase the amount of deadband until the desired INCREASING setpoint is achieved.
Options:	-UL/CSA approval (max rating 300 VAC) -NEMA 4X -Temperature stabilization and pre-cycle -Cleaned for oxygen service
Shipping Weight: Stripped Model: Housed Model:	 1.5 lbs. approximate 2.5 lbs. approximate

* See product configurator for additional options.
[1] ±1% for 32-110°F; ±2% for > 110°F; -2/+3°F for <32°F

Wiring Code

Lead	Circuit #1	Circuit #2
Normally Closed	Blue	Orange
Common	Purple	Brown
Normally Open	Red	Yellow

Wiring Diagram

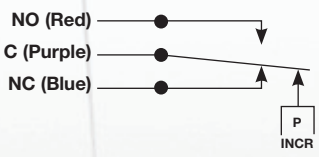

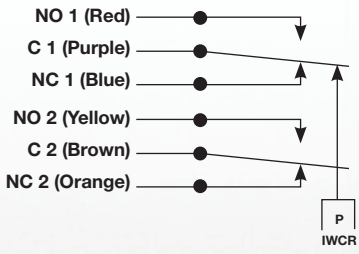

Barksdale
CONTROL PRODUCTS
CRANE
Barksdale, Inc./Barksdale GmbH
A Subsidiary of Crane Co.

Technical Drawing

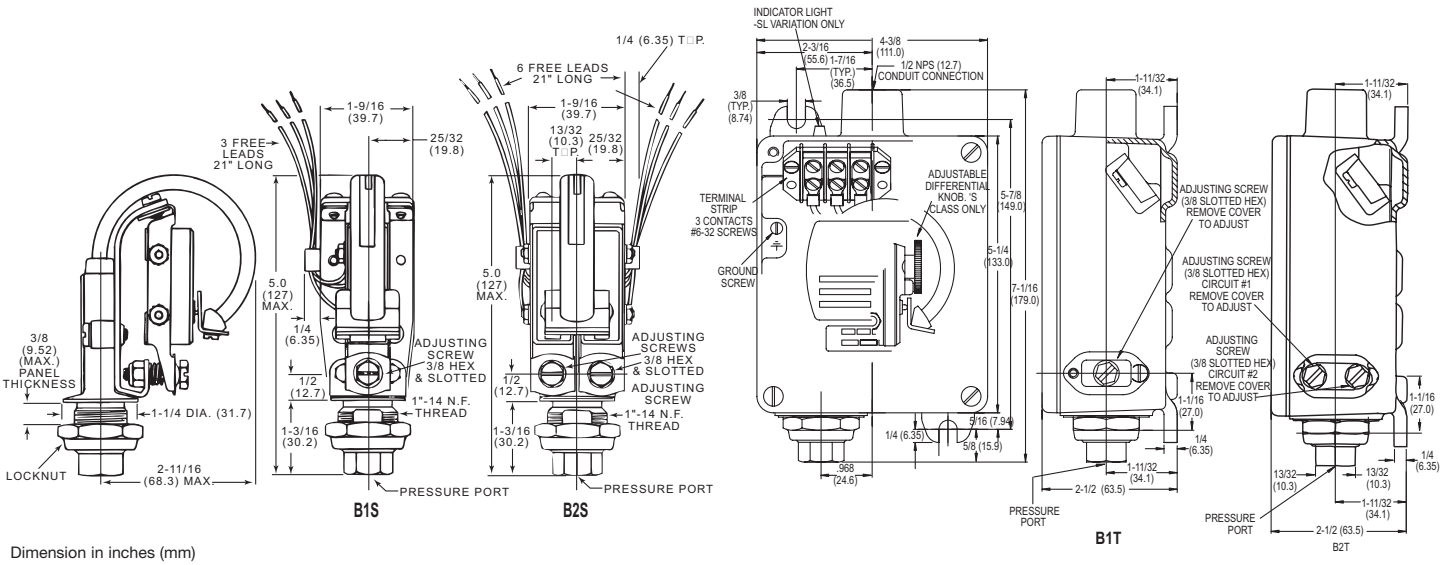

Dimension in inches (mm)

Product Configurator

Example	H	B1T	-AA	180	SS		

* Highlighted options represent those most frequently used. Select these common options for improved availability. (5/21)

H	Hermetically sealed limit switch option (requires AA, CC, GH or HH limit switch)

Series

B1T	Single Setpoint Housed
B2T	Dual Setpoint Housed
B1S	Single Setpoint Stripped
B2S	Dual Setpoint Stripped

Limit Switch[1]

-A	10 amps @ 125/250 VAC; 3 amps @ 480 VAC; (standard for pressure range 12, 48, 65, 120 and 180)
-B	10 amps @ 125/250/480 VAC; 0.05 amps @ 125 VDC; 0.03 amps @ 250 VDC (standard for pressure range 32)
-H	10 amps @ 125/250/480 VAC; 0.1 amps @ 125VDC; 0.05 amps @ 250 VDC (standard for pressure range 32)
-M	10 amps @ 125/250 VAC; 3 amps @ 480 VAC; 0.5 amps @ 125 VDC; 0.25 amps @ 250 VDC
-S	15 amps @ 125/250/480 VAC; 0.05 amps @ 125 VDC; 0.03 amps @ 250 VDC (adjustable differentials)
-GH	1 amp @ 125 VAC with Gold Contacts
-AA	Hermetically sealed; 4 amps @ 125/250 VAC
-CC	Hermetically sealed; 10 amps @ 125/250 VAC
-GH	Hermetically sealed; 1 amp @ 125 VAC with Gold Contacts
-HH	Hermetically sealed; 5 amps @ 125/250 VAC

Options

-CS [4]	UL & CSA Approval (only available with B1T & B2T)
-FX	NEMA 4X enclosure (only available with B1T & B2T)
-Z1	Cleaned for oxygen service
-Wxxx	Extra wire length (XXX = inches)
-Sxxx	Factory preset (consult factory)

Process Connection

Blank	1/4" NPT for 12, 32 & 48 Pressure Ranges & 1/4" Tube for 65, 120 & 180 Pressure Ranges (standard)
-P4	1/4" NPT Female (available on 65, 120, and 180 ranges only)

SS	Stainless steel bourdon tube

Pressure Range[5]

	Adjustable Range				Approx. Deadband[1, 2]	Proof	Proof
	Decreasing - psi (bar)		Increasing - psi (bar)		(Actuation Value)	B1T/B2T	B1S/B2S
	Min	Max	Min	Max	psi-(bar)	psi (bar)	psi (bar)
12	50 (3.4)	1180 (80.3)	70 (4.8)	1200 (81.6)	11 - 27 (0.7 - 1.8)	1800 (122)	1500 (103)
32	160 (11)	3161 (211)	199 (13.5)	3200 (213)	16 - 39 (1.1 - 2.7)	4800 (327)	4000 (275)
48	240 (16)	4715 (321)	325 (21.7)	4800 (327)	40 - 85 (2.7 - 5.8)	7200 (490)	6000 (414)
65	325 (22)	6385 (434)	440 (29.9)	6500 (442)	54 - 115 (3.7 - 7.8)	9750 (663)	8125 (560)
120 [3]	600 (41)	11450 (779)	1150 (78)	12000 (816)	275 - 550 (18.7 - 37.4)	18000 (1224)	15000 (1034)
180 [3]	600 (41)	17450 (1187)	1150 (78)	18000 (1224)	275 - 550 (18.7 - 37.4)	18000 (1224)	15000 (1034)

[1] Consult sales drawings for specific deadband values
[2] Deadband values indicated when used with the "standard" limit switch
[3] This range is not available with any agency approval (no -CS)
[4] Limited to 300VAC (-CS: CSA only on B1S/B2S models and no UL)
[5] Subject to change

3211 Fruitland Avenue • Los Angeles, CA 90058 • ☎ 800-835-1060 • Fax: 323-589-3463 • www.barksdale.com

Barksdale CONTROL PRODUCTS