GEMÜ 695

Pneumatically operated diaphragm valve



Features

- CIP/SIP capable
- Wide range of adaptation options for add-on components and accessories
- Suitable for particulate and abrasive media
- Stainless steel body suitable for corrosive environments

Description

The GEMÜ 695 2/2-way diaphragm valve has a low-maintenance membrane actuator and is pneumatically operated. Normally Closed (NC), Normally Open (NO) and Double Acting (DA) control functions are available.

Technical specifications

- **Media temperature :** -10 to 80 °C
- **Ambient temperature:** 0 to 60 °C
- **Operating pressure :** 0 to 10 bar
- **Nominal sizes:** 1/2" (DN 15) to 2 1/2" (DN 65)
- **Body configurations:** 2/2-way body
- **Connection types:** Clamp l Flange l Spigot l Threaded connection
- **Connection standards:** ANSI l ASME l BS l DIN l EN l ISO l JIS l SMS
- **Body materials:** 1.4408, investment casting material l 1.4408, investment casting material, PFA lined l 1.4435 (316L), forged material l 1.4435 (BN2), forged material l 1.4435, investment casting material l 1.4539 (904L), forged material l EN-GJS-400-18-LT, SG iron material l EN-GJS-400-18-LT, SG iron material with butyl lining l EN-GJS-400-18-LT, SG iron material with hard rubber lining l EN-GJS-400-18-LT, SG iron material with soft rubber lining l EN-GJS-400-18-LT, SG iron material, PFA lined l EN-GJS-400-18-LT, SG iron material, PP lined
- **Diaphragm materials:** EPDM l FKM l NBR l PTFE/EPDM l PTFE/FKM
- **Conformities:** Belgaqua l EAC l FDA l Oxygen l TA Luft (German Clean Air Act)

Technical data depends on the respective configuration

BELGAQUA EAC FDA

further information
webcode: GW-695

Product description

Construction

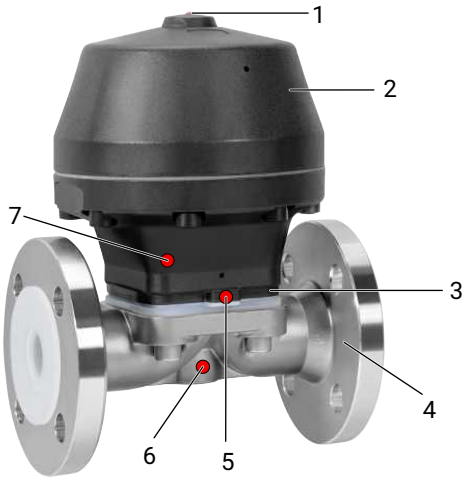

Item	Name	Materials
1	Position indicator	
2	Membrane actuator	PP, glass fibre reinforced
3	Diaphragm	EPDM FKM NBR PTFE/EPDM (one-piece, two-piece) PTFE/FKM (two-piece) PTFE/PVDF/EPDM (three-piece)
4	Valve body	EN-GJS-400-18-LT (GGG 40.3) EN-GJS-400-18-LT (GGG 40.3) butyl lined EN-GJS-400-18-LT (GGG 40.3) PFA lined EN-GJS-400-18-LT (GGG 40.3) PP lined EN-GJS-400-18-LT (GGG 40.3) soft rubber lined EN-GJS-400-18-LT (GGG 40.3) hard rubber lined 1.4408, investment casting 1.4408, PFA lined 1.4435 (F316L), forged body 1.4435 (BN2), forged body, Δ Fe < 0.5% 1.4435, investment casting 1.4539, forged body
5	CONEXO diaphragm RFID chip (see Conexo information)	
6	CONEXO body RFID chip (see Conexo information)	
7	CONEXO actuator RFID chip (see Conexo information)	

GEMÜ CONEXO

The interaction of valve components that are equipped with RFID chips and an associated IT infrastructure actively increase process reliability.



Thanks to serialization, every valve and every relevant valve component such as the body, actuator or diaphragm, and even automation components, can be clearly traced and read using the CONEXO pen RFID reader. The CONEXO app, which can be installed on mobile devices, not only facilitates and improves the "installation qualification" process, but also makes the maintenance process much more transparent and easier to document. The app actively guides the maintenance technician through the maintenance schedule and directly provides him with all the information assigned to the valve, such as test reports, testing documentation and maintenance histories. The CONEXO portal acts as a central element, helping to collect, manage and process all data.

For further information on GEMÜ CONEXO please visit:
www.gemu-group.com/conexo

Ordering

GEMÜ Conexo must be ordered separately with the ordering option "CONEXO".

Availabilities

Availability of grades of surface finish

Internal surface finishes for forged and solid bodies [1)]

Media contacts interior surfaces	Mechanically polished [2)]		Electropolished	
	Hygiene class DIN 11866	Code	Hygiene class DIN 11866	Code
Ra ≤ 0,80 µm	H3	1502	HE3	1503
Ra ≤ 0,60 µm	-	1507	-	1508
Ra ≤ 0,40 µm	H4	1536	HE4	1537
Ra ≤ 0,25 µm [3)]	H5	1527	HE5	1516
Media contacts interior surfaces to ASME BPE 2016 [4)]	Mechanically polished [2)]		Electropolished	
	ASME BPE Surface designation	Code	ASME BPE Surface designation	Code
Ra max. = 0,76 µm (30 µinch)	SF3	SF3	-	-
Ra max. = 0,64 µm (25 µinch)	SF2	SF2	SF6	SF6
Ra max. = 0,51 µm (20 µinch)	SF1	SF1	SF5	SF5
Ra max. = 0,38 µm (15 µinch)	-	-	SF4	SF4

Internal surface finishes for investment casting bodies

Media contacts interior surfaces	Mechanically polished [2)]	
	Hygiene class DIN 11866	Code
Ra ≤ 6,30 µm	-	1500
Ra ≤ 0,80 µm	H3	1502
Ra ≤ 0,60 µm [5)]	-	1507

Ra acc. to DIN EN ISO 4288 and ASME B46.1

1) Surface finishes of customized valve bodies may be limited in special cases.

2) Or any other finishing method that meets the Ra value (acc. to ASME BPE).

3) The smallest possible Ra finish for pipe connections with an internal pipe diameter < 6 mm is 0.38 µm.

4) When using these surfaces, the bodies are marked according to the specifications of ASME BPE.
The surfaces are only available for valve bodies which are made of materials (e.g. GEMÜ material codes 40, 41, F4, 44)) and use connections (e.g. GEMÜ connection codes 59, 80, 88) according to ASME BPE.

5) Not possible for GEMÜ connection code 59, DN 8 and GEMÜ connection code 0, DN 4.

Availability of valve bodies

Spigot

MG	DN	Connection type code [1]															
		0	16	17		18	35	36	37		55	59		60		63	64	65
		Material code [2]																
		40, 42, F4	40, 42, F4	C3	40, 42, F4	40, 42, F4	40, 42, F4	40, 42, F4	C3	40, 42, F4	40, 42, F4	C3	40, 42, F4	C3	40, 42, F4	40, 42, F4	40, 42, F4	40, 42, F4
25	**15**	X	X	X	X	X	-	X	-	-	-	-	-	X	X	X	X	X
	20	X	X	X	X	X	-	X	-	-	X	X	X	X	X	X	X	X
	25	X	X	X	X	X	X	X	X	X	-	X	X	X	X	X	X	X
40	**32**	X	X	X	X	X	X	X	-	X	-	-	-	X	X	X	X	X
	40	X	X	X	X	X	X	X	X	X	-	X	X	X	X	X	X	X
50	**50**	X	X	X	X	X	X	X	X	X	-	X	X	X	X	X	X	X
	65	-	-	-	-	-	X	-	-	X	-	-	X	-	-	-	-	-

MG = diaphragm size, X = standard

1) **Connection type**
Code 0: Spigot DIN
Code 16: Spigot DIN EN 10357 series B (2014 edition; formerly DIN 11850 series 1)
Code 17: Spigot EN 10357 series A/DIN 11866 series A formerly DIN 11850 series 2
Code 18: Spigot DIN 11850 series 3
Code 35: Spigot JIS-G 3447
Code 36: Spigot JIS-G 3459 schedule 10s
Code 37: Spigot SMS 3008
Code 55: Spigot BS 4825, part 1
Code 59: Spigot ASME BPE/DIN EN 10357 series C (from 2022 edition)/DIN 11866 series C
Code 60: Spigot ISO 1127/DIN EN 10357 series C (2014 edition)/DIN 11866 series B
Code 63: Spigot ANSI/ASME B36.19M schedule 10s
Code 64: Spigot ANSI/ASME B36.19M schedule 5s
Code 65: Spigot ANSI/ASME B36.19M schedule 40s

2) **Valve body material**
Code 40: 1.4435 (F316L), forged body
Code 42: 1.4435 (BN2), forged body, Δ Fe < 0.5%
Code C3: 1.4435, investment casting
Code F4: 1.4539, forged body

Threaded connection

MG	DN	Connection type code [1]		
		1	31	6, 6K
		Material code [2]		
		37, 90	37, 90	40, 42
25	15	X	X	W
	20	X	X	W
	25	X	X	W
40	32	X	X	W
	40	X	X	W
50	50	X	X	W

MG = diaphragm size, X = standard
W = welded assembly

1) **Connection type**
Code 1: Threaded socket DIN ISO 228
Code 31: NPT female thread
Code 6: Threaded spigot DIN 11851
Code 6K: Cone spigot and union nut DIN 11851

2) **Valve body material**
Code 37: 1.4408, investment casting
Code 40: 1.4435 (F316L), forged body
Code 42: 1.4435 (BN2), forged body, Δ Fe < 0.5%
Code 90: EN-GJS-400-18-LT (GGG 40.3)

Flange

MG	DN	Connection type code [1]					
		8		34	38	39	
		Material code [2]					
		17, 18, 39, 82, 83, 88, 90	40, 42, C3	39	17, 18 [3], 39, 82, 83, 88	17, 18, 39, 82, 83, 88, 90	40, 42, C3
25	**15**	X	W	X	-	X	W
	20	X	W	X	X	X	W
	25	X	W	X	X	X	W
40	**32**	X	W	X	-	X	W
	40	X	W	X	X	X	W
50	**50**	X	W	X	X	X	W
	65	X	-	-	X	X	-

MG = diaphragm size, X = standard
W = welded assembly

1) **Connection type**
Code 8: Flange EN 1092, PN 16, form B, face-to-face dimension FTF EN 558 series 1, ISO 5752, basic series 1, length only for body configuration D
Code 34: Flange JIS B2220, 10K, RF, face-to-face dimension FTF EN 558 series 1, ISO 5752, basic series 1, length only for body configuration D
Code 38: Flange ANSI Class 150 RF, face-to-face dimension FTF MSS SP-88, length only for body configuration D
Code 39: Flange ANSI Class 125/150 RF, face-to-face dimension FTF EN 558 series 1, ISO 5752, basic series 1, length only for body configuration D

2) **Valve body material**
Code 17: EN-GJS-400-18-LT (GGG 40.3), PFA lined
Code 18: EN-GJS-400-18-LT (GGG 40.3), PP lined
Code 39: 1.4408, PFA lined
Code 40: 1.4435 (F316L), forged body
Code 42: 1.4435 (BN2), forged body, Δ Fe < 0.5%
Code 82: EN-GJS-400-18-LT (GGG 40.3), soft rubber lined
Code 83: EN-GJS-400-18-LT (GGG 40.3), hard rubber lined
Code 88: EN-GJS-400-18-LT (GGG 40.3), butyl lined
Code 90: EN-GJS-400-18-LT (GGG 40.3)
Code C3: 1.4435, investment casting

3) On request

Clamp

MG	DN	Connection type code [1]				
		80, 8P	82	88, 8T	8A	8E
		Material code [2]				
		40, 42, F4				
25	15	-	W	-	K	-
	20	K	K	K	K	-
	25	K	K	K	K	K
40	32	-	W	-	K	K
	40	K	W	K	K	K
50	50	K	W	K	K	K
	65	W	-	W	-	W

MG = diaphragm size
K = connections completely machined (not welded)
W = welded assembly

1) **Connection type**
Code 80: Clamp ASME BPE, face-to-face dimension FTF ASME BPE, length only for body configuration D
Code 82: Clamp DIN 32676 series B, face-to-face dimension FTF EN 558 series 7, length only for body configuration D
Code 88: Clamp ASME BPE, for pipe ASME BPE, face-to-face dimension FTF EN 558 series 7, length only for body configuration D
Code 8A: Clamp DIN 32676 series A, face-to-face dimension FTF acc. to EN 558 series 7, length only for body configuration D
Code 8E: Clamp ISO 2852 for pipe ISO 2037, clamp SMS 3017 for pipe SMS 3008 face-to-face dimension FTF EN 558 series 7, length only for body configuration D
Code 8P: Clamp DIN 32676 series C, face-to-face dimension FTF ASME BPE, length only for body configuration D
Code 8T: Clamp DIN 32676 series C, face-to-face dimension FTF EN 558 series 7, length only for body configuration D

2) **Valve body material**
Code 40: 1.4435 (F316L), forged body
Code 42: 1.4435 (BN2), forged body, Δ Fe < 0.5%
Code F4: 1.4539, forged body

Availability of product conformity

	Diaphragm material code [1]	Body material code [2]
Drinking water		
Belgaqua (B)	28	37

1) **Diaphragm material**
Code 28: EPDM

2) **Valve body material**
Code 37: 1.4408, investment casting

Order data

The order data provide an overview of standard configurations.

Please check the availability before ordering. Other configurations available on request.

Order codes

1 Type	Code
Diaphragm valve, pneumatically operated, plastic membrane actuator	695

2 DN	Code
DN 15	15
DN 20	20
DN 25	25
DN 32	32
DN 40	40
DN 50	50
DN 65	65

3 Body configuration	Code
2/2-way body	D

4 Connection type	Code
Spigot	
Spigot DIN	0
Spigot DIN EN 10357 series B (2014 edition; formerly DIN 11850 series 1)	16
Spigot EN 10357 series A/DIN 11866 series A formerly DIN 11850 series 2	17
Spigot DIN 11850 series 3	18
Spigot JIS-G 3447	35
Spigot JIS-G 3459 schedule 10s	36
Spigot SMS 3008	37
Spigot BS 4825, part 1	55
Spigot ASME BPE/DIN EN 10357 series C (from 2022 edition)/DIN 11866 series C	59
Spigot ISO 1127/DIN EN 10357 series C (2014 edition)/ DIN 11866 series B	60
Spigot ANSI/ASME B36.19M schedule 10s	63
Spigot ANSI/ASME B36.19M schedule 5s	64
Spigot ANSI/ASME B36.19M schedule 40s	65
Threaded connection	
Threaded socket DIN ISO 228	1
NPT female thread	31
Threaded spigot DIN 11851	6
Cone spigot and union nut DIN 11851	6K
Flange	
Flange EN 1092, PN 16, form B, face-to-face dimension FTF EN 558 series 1, ISO 5752, basic series 1, length only for body configuration D	8
Flange JIS B2220, 10K, RF, face-to-face dimension FTF EN 558 series 1, ISO 5752, basic series 1, length only for body configuration D	34

4 Connection type	Code
Flange ANSI Class 150 RF, face-to-face dimension FTF MSS SP-88, length only for body configuration D	38
Flange ANSI Class 125/150 RF, face-to-face dimension FTF EN 558 series 1, ISO 5752, basic series 1, length only for body configuration D	39
Clamp	
Clamp ASME BPE, face-to-face dimension FTF ASME BPE, length only for body configuration D	80
Clamp DIN 32676 series B, face-to-face dimension FTF EN 558 series 7, length only for body configuration D	82
Clamp ASME BPE, for pipe ASME BPE, face-to-face dimension FTF EN 558 series 7, length only for body configuration D	88
Clamp DIN 32676 series A, face-to-face dimension FTF acc. to EN 558 series 7, length only for body configuration D	8A
Clamp ISO 2852 for pipe ISO 2037, clamp SMS 3017 for pipe SMS 3008 face-to-face dimension FTF EN 558 series 7, length only for body configuration D	8E
Clamp DIN 32676 series C, face-to-face dimension FTF ASME BPE, length only for body configuration D	8P
Clamp DIN 32676 series C, face-to-face dimension FTF EN 558 series 7, length only for body configuration D	8T

5 Valve body material	Code
SG iron material	
EN-GJS-400-18-LT (GGG 40.3), PFA lined	17
EN-GJS-400-18-LT (GGG 40.3), PP lined	18
EN-GJS-400-18-LT (GGG 40.3), soft rubber lined	82
EN-GJS-400-18-LT (GGG 40.3), hard rubber lined	83
EN-GJS-400-18-LT (GGG 40.3), butyl lined	88
EN-GJS-400-18-LT (GGG 40.3)	90
Investment casting material	
1.4408, investment casting	37
1.4408, PFA lined	39
1.4435, investment casting	C3
Forged material	
1.4435 (F316L), forged body	40

5 Valve body material	Code
1.4435 (BN2), forged body, Δ Fe < 0.5%	42
1.4539, forged body	F4
EN-GJS-400-18-LT (GGG 40.3), soft rubber lined	82

6 Diaphragm material	Code
Elastomer	
NBR	2
FKM	4
EPDM	13
EPDM	17
EPDM	19
EPDM	28
EPDM	29
PTFE	
PTFE/EPDM one-piece	54
PTFE/EPDM two-piece	5M
PTFE/FKM two-piece	5T
PTFE/PVDF/EPDM three-piece	71
Note: The PTFE/PVDF/EPDM diaphragm (code 71) can only be combined with PFA lined valve bodies.	

7 Control function	Code
Normally closed (NC)	1
Normally open (NO)	2
Double acting (DA)	3

8 Actuator version	Code
DN 15 - 25, diaphragm size 25	
Actuator size FDM	FDM
Actuator size FDN	FDN
DN 32 - 40, diaphragm size 40	
Actuator size HDM	HDM
Actuator size HDN	HDN
DN 50–65, diaphragm size 50	
Actuator size JDM	JDM
Actuator size JDN	JDN

9 Surface	Code
Ra ≤ 6.3 µm (250 µin.) for media wetted surfaces, mechanically polished internal	1500
Ra ≤ 0.8 µm (30 µin.) for media wetted surfaces, in accordance with DIN 11866 H3, mechanically polished internal	1502
Ra ≤ 0.8 µm (30 µin.) for media wetted surfaces, in accordance with DIN 11866 HE3, electropolished internal/external	1503
Ra ≤ 0.6 µm (25 µin.) for media wetted surfaces, mechanically polished internal	1507
Ra ≤ 0.6 µm (25 µin.) for media wetted surfaces, electropolished internal/external	1508
Ra ≤ 0.25 µm (10 µin.) for media wetted surfaces *), in accordance with DIN 11866 HE5, electropolished internal/external, *) for inner pipe diameters < 6 mm, in the spigot Ra ≤ 0.38 µm	1516

9 Surface	Code
Ra ≤ 0.25 µm (10 µin.) for media wetted surfaces *), in accordance with DIN 11866 H5, mechanically polished internal, *) for inner pipe diameters < 6 mm, in the spigot Ra ≤ 0.38 µm	1527
Ra ≤ 0.4 µm (15 µin.) for media wetted surfaces, in accordance with DIN 11866 H4, mechanically polished internal	1536
Ra ≤ 0.4 µm (15 µin.) for media wetted surfaces, in accordance with DIN 11866 HE4, electropolished internal/external	1537
Ra max. 0.51 µm (20 µin.) for media wetted surfaces, in accordance with ASME BPE SF1, mechanically polished internal	SF1
Ra max. 0.64 µm (25 µin.) for media wetted surfaces, in accordance with ASME BPE SF2, mechanically polished internal	SF2
Ra max. 0.76 µm (30 µin.) for media wetted surfaces, in accordance with ASME BPE SF3, mechanically polished internal	SF3
Ra max. 0.38 µm (15 µin.) for media wetted surfaces, in accordance with ASME BPE SF4, electropolished internal/external	SF4
Ra max. 0.51 µm (20 µin.) for media wetted surfaces, in accordance with ASME BPE SF5, electropolished internal/external	SF5
Ra max. 0.64 µm (25 µin.) for media wetted surfaces, in accordance with ASME BPE SF6, electropolished internal/external	SF6

10 Special version	Code
Without	
BELGAQUA certification	B
Special version for oxygen, maximum medium temperature: 60 °C	S

11 CONEXO	Code
Without	
Integrated RFID chip for electronic identification and traceability	C

Order example

Ordering option	Code	Description
1 Type	695	Diaphragm valve, pneumatically operated, plastic membrane actuator
2 DN	25	DN 25
3 Body configuration	D	2/2-way body
4 Connection type	60	Spigot ISO 1127/DIN EN 10357 series C (2014 edition)/DIN 11866 series B
5 Valve body material	C3	1.4435, investment casting
6 Diaphragm material	17	EPDM
7 Control function	1	Normally closed (NC)
8 Actuator version	FDN	Actuator size FDN
9 Surface	1500	Ra ≤ 6.3 µm (250 µin.) for media wetted surfaces, mechanically polished internal
10 Special version	S	Special version for oxygen, maximum medium temperature: 60 °C
11 CONEXO		Without

Technical data

Medium

Working medium:

Corrosive, inert, gaseous and liquid media which have no negative impact on the physical and chemical properties of the body and diaphragm material.

The valve will seal in both flow directions up to full operating pressure (gauge pressure).

For special oxygen version (code S): only gaseous oxygen

Control medium:

Inert gases

Temperature

Media temperature:

Diaphragm material	Standard	Special version for oxygen
NBR (code 2)	-10 — 80 °C	-
FKM (code 4)	-10 — 80 °C	-
EPDM (code 13)	-10 — 80 °C	0 — 60 °C
EPDM (code 17)	-10 — 80 °C	-
EPDM (code 19)	-10 — 80 °C	0 — 60 °C
EPDM (code 28)	-10 — 80 °C	-
EPDM (code 29)	-10 — 80 °C	-
PTFE/EPDM (code 54)	-10 — 80 °C	0 — 60 °C
PTFE/PVDF/EPDM (code 71)	-10 — 80 °C	-
PTFE/EPDM (code 5M)	-10 — 80 °C	0 — 60 °C
PTFE/FKM (code 5T)	-10 — 80 °C	-

Ambient temperature:

0 — 60 °C

Control medium temperature:

0 — 40 °C

Storage temperature:

0 — 40 °C

Pressure

Operating pressure:

MG	DN	Actuator version code	Control function 1		Control function 2 + 3	
			Diaphragm material			
			EPDM/ FKM	PTFE	EPDM/ FKM	PTFE
25	15, 20, 25	FDM	0 - 6	0 - 6	-	-
		FDN	0 - 10	0 - 10	0 - 10	0 - 10
40	32, 40	HDM	0 - 6	0 - 6	-	-
		HDN	0 - 10	0 - 10	0 - 10	0 - 10
50	50, 65	JDM	0 - 6	0 - 6	-	-
		JDN	0 - 10	0 - 10	0 - 10	0 - 10

MG = diaphragm size
All pressures are gauge pressures. Operating pressure values were determined with static operating pressure applied on one side of a closed valve. Sealing at the valve seat and atmospheric sealing is ensured for the given values.
Information on operating pressures applied on both sides and for high purity media on request.

Pressure rating: PN 16

Leakage rate: Leakage rate A to P11/P12 EN 12266-1

Control pressure:

MG	DN	Actuator version code	Control function 1	Control function 2	Control function 3
25	15, 20, 25	FDM	3.8 - 6.0	-	-
		FDN	5.5 - 7.0	max. 5.5	max. 5.5
40	32, 40	HDM	3.8 - 6.0	-	-
		HDN	5.5 - 7.0	max. 5.5	max. 5.5
50	50, 65	JDM	3.8 - 6.0	-	-
		JDN	5.5 - 7.0	max. 5.0	max. 5.0

MG = diaphragm size
All pressures are gauge pressures.

Control pressure/operating pressure diagram – Control function 2 and 3

PTFE diaphragm

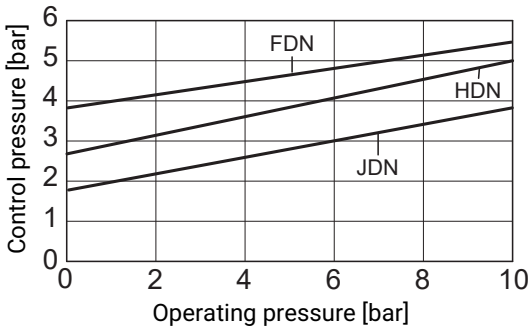

Elastomer diaphragm

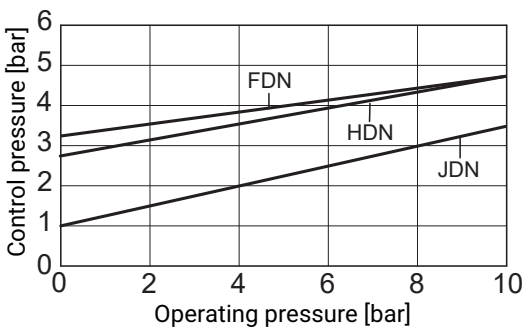

The values shown relate to control function 2 (with lifting spring).
For control function 3 (without lifting spring) control pressure is approx. 1 bar lower.
The control pressure depending on the prevailing operating pressure, as shown in the diagram, is intended as a guide for operating the system with low wear on the diaphragm.

Filling volume:

Actuator version code	Control function 1	Control function 2
FDM	0.19	-
FDN	0.19	0.16
HDM	0.52	-
HDN	0.52	0.40
JDM	1.06	-
JDN	1.06	0.67

Filling volume in dm³
C.f. 3 = for filling volume in open position see c.f. 1, for filling volume in closed position see c.f. 2

Cv values:

MG	DN	Connection types code								
		0	16	17	18	37	59	60	1	31
25	**15**	4.1	4.7	4.7	4.7	-	-	7.4	6.5	6.5
	20	6.3	7.0	7.0	7.0	-	4.4	13.2	10.0	10.0
	25	13.9	15.0	15.0	15.0	12.6	12.2	16.2	14.0	14.0
40	**32**	25.3	27.0	27.0	27.0	26.2	-	30.0	26.0	26.0
	40	29.3	30.9	30.9	30.9	30.2	29.5	32.8	33.0	33.0
50	**50**	46.5	48.4	48.4	48.4	51.7	50.6	55.2	60.0	60.0
	65	-	-	-	-	62.2	61.8	-	-	-

MG = diaphragm size
Kv values in m³/h
Kv values determined in accordance with DIN EN 60534 standard, inlet pressure 5 bar, Δp 1 bar, stainless steel valve body and soft elastomer diaphragm. The Kv values for other product configurations (e.g. other diaphragm or body materials) may differ. In general, all diaphragms are subject to the influences of pressure, temperature, the process and their tightening torques. Therefore the Kv values may exceed the tolerance limits of the standard.
The Kv value curve (Kv value dependent on valve stroke) can vary depending on the diaphragm material and duration of use.

MG	DN	Cast body without lining		Rubber lining	Plastic lining
		Threaded body	Flanged body		
		Material code 90		Material code 82, 83, 88	Material code 17, 18, 39
25	**15**	8.0	10.0	6.0	5.0
	20	11.5	14.0	11.0	9.0
	25	11.5	17.0	15.0	13.0
40	**32**	28.0	36.0	29.0	23.0
	40	28.0	40.0	32.0	26.0
50	**50**	60.0	68.0	64.0	47.0
	65	-	68.0	64.0	47.0

MG = diaphragm size
Kv values in m³/h
Kv values determined in accordance with DIN EN 60534, inlet pressure 5 bar, Δp 1 bar, with connection flange EN 1092 length EN 558 series 1 (or threaded socket DIN ISO 228 for body material GGG40.3) and soft elastomer diaphragm. The Kv values for other product configurations (e.g. other diaphragm or body materials) may differ. In general, all diaphragms are subject to the influences of pressure, temperature, the process and their tightening torques. Therefore the Kv values may exceed the tolerance limits of the standard.
The Kv value curve (Kv value dependent on valve stroke) can vary depending on the diaphragm material and term of use.

Product conformity

Machinery Directive: 2006/42/EC

Pressure Equipment Directive: 2014/68/EU

Food: Regulation (EC) No. 1935/2006
Regulation (EC) No. 10/2011*
FDA*
USP* Class VI

Drinking water: Belgaqua*
* depending on version and/or operating parameters

Mechanical data

Weight:

Actuator

MG	DN	Actuator version code	Control function 1	Control function 2 and 3
25	**15, 20, 25**	**FDM, FDN**	1.6	1.0
40	**32, 40**	**HDM, HDN**	3.5	2.2
50	**50, 65**	**JDM, JDN**	5.7	3.8

Weights in kg
MG = diaphragm size

Connection type code		0, 16, 17, 18, 35, 36, 37, 55, 59, 60, 63, 64, 65	1, 31	1, 31	6, 6K	8, 38, 39	80, 82, 88, 8A, 8E, 8P, 8T
Valve body		Spigot	Threaded socket		Threaded spigot	Flange	Clamp
Material code			37	90			
MG	DN						
25	**15**	0.62	0.32	0.50	0.71	1.50	0.75
	20	0.58	0.34	0.60	0.78	2.20	0.71
	25	0.55	0.39	0.90	0.79	2.80	0.63
40	**32**	1.45	0.88	1.40	1.66	3.40	1.62
	40	1.32	0.93	1.90	1.62	4.50	1.50
50	**50**	2.25	1.56	2.70	2.70	6.30	2.50
	65	2.20	-	-	-	10.30	2.30

MG = diaphragm size, weight in kg

Installation position: Optional

Observe the angle of rotation for optimized draining when it comes to installation.
See separate document, "Angle of rotation technical information".

Dimensions

Actuator dimensions

Actuator - Control function 1

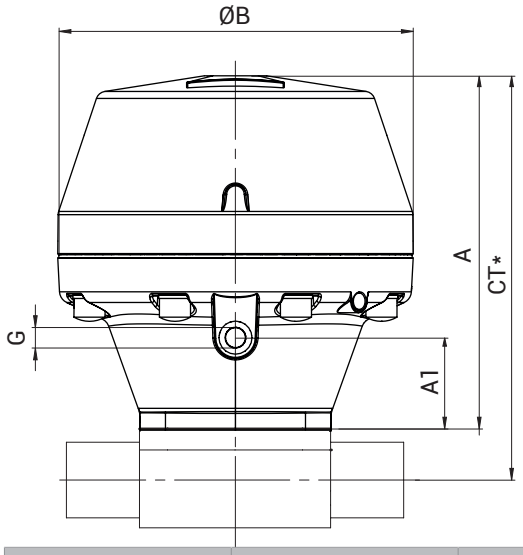

MG	Actuator version code	ø B	A	A1	G
25	**FDM, FDN**	130.0	146.0	28.0	G 1/4
40	**HDM, HDN**	171.0	197.0	52.0	G 1/4
50	**JDM, JDN**	211.0	245.0	90.0	G 1/4

Dimensions in mm
MG = diaphragm size
* CT = A + H1 (see body dimensions)

Actuator - Control function 2 and 3

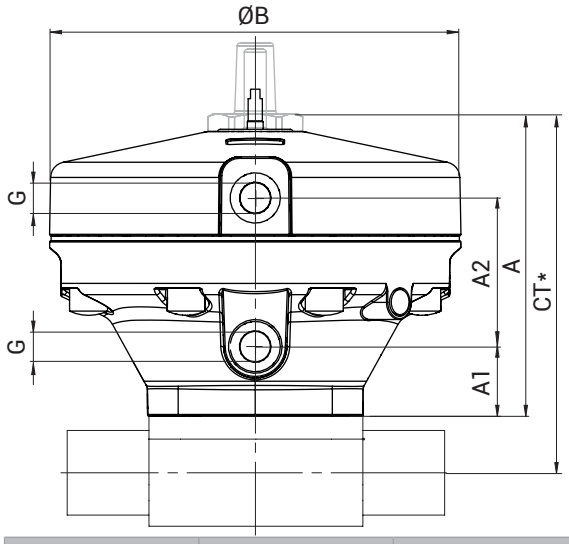

MG	Actuator version code	ø B	A	A1	A2	G
25	**FDM, FDN**	130.0	123.0	28.0	47.0	G 1/4
40	**HDM, HDN**	171.0	162.0	52.0	55.0	G 1/4
50	**JDM, JDN**	211.0	206.0	90.0	48.0	G 1/4

Dimensions in mm
MG = diaphragm size
* CT = A + H1 (see body dimensions)

Body dimensions

Spigot DIN/EN/ISO (code 0, 16, 17, 18, 60)

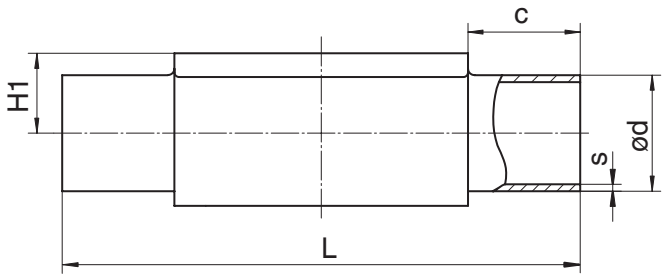

Connection type spigot DIN/EN/ISO (code 0, 16, 17, 18, 60) [1], forged material (code 40, 42, F4) [2]

MG	DN	NPS	c (min)	ød					H1	L	s				
				Connection type							Connection type				
				0	16	17	18	60			0	16	17	18	60
25	15	1/2"	25.0	18.0	18.0	19.0	20.0	21.3	19.0	120.0	1.5	1.0	1.5	2.0	1.6
	20	3/4"	25.0	22.0	22.0	23.0	24.0	26.9	19.0	120.0	1.5	1.0	1.5	2.0	1.6
	25	1"	25.0	28.0	28.0	29.0	30.0	33.7	19.0	120.0	1.5	1.0	1.5	2.0	2.0
40	32	1¼"	25.0	34.0	34.0	35.0	36.0	42.4	26.0	153.0	1.5	1.0	1.5	2.0	2.0
	40	1½"	30.5	40.0	40.0	41.0	42.0	48.3	26.0	153.0	1.5	1.0	1.5	2.0	2.0
50	50	2"	30.0	52.0	52.0	53.0	54.0	60.3	32.0	173.0	1.5	1.0	1.5	2.0	2.0

Dimensions in mm
MG = diaphragm size

1) **Connection type**
Code 0: Spigot DIN
Code 16: Spigot DIN EN 10357 series B (2014 edition; formerly DIN 11850 series 1)
Code 17: Spigot EN 10357 series A/DIN 11866 series A formerly DIN 11850 series 2
Code 18: Spigot DIN 11850 series 3
Code 60: Spigot ISO 1127/DIN EN 10357 series C (2014 edition)/DIN 11866 series B

2) **Valve body material**
Code 40: 1.4435 (F316L), forged body
Code 42: 1.4435 (BN2), forged body, Δ Fe < 0.5%
Code F4: 1.4539, forged body

Connection type spigot DIN/EN/ISO (code 17, 60) [1], investment casting material (code C3) [2]

MG	DN	NPS	c (min)	ød		H1	L	s	
				Connection type				Connection type	
				17	60			17	60
25	15	1/2"	25.0	19.0	21.3	13.0	120.0	1.5	1.6
	20	3/4"	25.0	23.0	26.9	16.0	120.0	1.5	1.6
	25	1"	25.0	29.0	33.7	19.0	120.0	1.5	2.0
40	32	1¼"	25.0	35.0	42.4	24.0	153.0	1.5	2.0
	40	1½"	30.5	41.0	48.3	26.0	153.0	1.5	2.0
50	50	2"	30.0	53.0	60.3	32.0	173.0	1.5	2.0

Dimensions in mm
MG = diaphragm size

1) **Connection type**
Code 17: Spigot EN 10357 series A/DIN 11866 series A formerly DIN 11850 series 2
Code 60: Spigot ISO 1127/DIN EN 10357 series C (2014 edition)/DIN 11866 series B

2) **Valve body material**
Code C3: 1.4435, investment casting

Spigot ASME/BS (code 55, 59, 63, 64, 65)

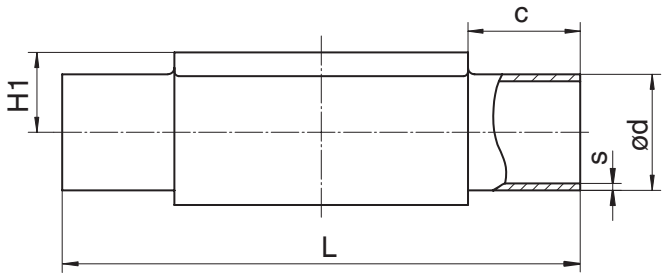

Connection type spigot ASME/BS (code 55, 59, 63, 64, 65)[1], forged material (code 40, 42, F4)[2]

MG	DN	NPS	c (min)	ød					H1	L	s				
				Connection type							Connection type				
				55	59	63	64	65			55	59	63	64	65
25	**15**	**1/2"**	25.0	-	-	21.3	21.3	21.3	19.0	120.0	-	-	2.11	1.65	2.77
	20	**3/4"**	25.0	19.05	19.05	26.7	26.7	26.7	19.0	120.0	1.2	1.65	2.11	1.65	2.87
	25	**1"**	25.0	-	25.40	33.4	33.4	33.4	19.0	120.0	-	1.65	2.77	1.65	3.38
40	**32**	**1¼"**	25.0	-	-	42.2	42.2	42.2	26.0	153.0	-	-	2.77	1.65	3.56
	40	**1½"**	30.5	-	38.10	48.3	48.3	48.3	26.0	153.0	-	1.65	2.77	1.65	3.68
50	**50**	**2"**	30.0	-	50.80	60.3	60.3	60.3	32.0	173.0	-	1.65	2.77	1.65	3.91
	65	**2½"**	30.0	-	63.50	-	-	-	34.0	173.0	-	1.65	-	-	-

Dimensions in mm
MG = diaphragm size

1) **Connection type**
Code 55: Spigot BS 4825, part 1
Code 59: Spigot ASME BPE/DIN EN 10357 series C (from 2022 edition)/DIN 11866 series C
Code 63: Spigot ANSI/ASME B36.19M schedule 10s
Code 64: Spigot ANSI/ASME B36.19M schedule 5s
Code 65: Spigot ANSI/ASME B36.19M schedule 40s

2) **Valve body material**
Code 40: 1.4435 (F316L), forged body
Code 42: 1.4435 (BN2), forged body, Δ Fe < 0.5%
Code F4: 1.4539, forged body

Connection type spigot ASME BPE (code 59)[1], investment casting material (code C3)[2]

MG	DN	NPS	c (min)	ød	H1	L	s
25	**20**	**3/4"**	25.0	19.05	16.0	120.0	1.65
	25	**1"**	25.0	25.40	19.0	120.0	1.65
40	**32**	**1¼"**	25.0	-	-	153.0	-
	40	**1½"**	30.5	38.10	26.0	153.0	1.65
50	**50**	**2"**	30.0	50.80	32.0	173.0	1.65
	65	**2½"**	30.0	63.50	-	173.0	1.65

Dimensions in mm
MG = diaphragm size

1) **Connection type**
Code 59: Spigot ASME BPE/DIN EN 10357 series C (from 2022 edition)/DIN 11866 series C

2) **Valve body material**
Code C3: 1.4435, investment casting

Spigot JIS/SMS (code 35, 36, 37)

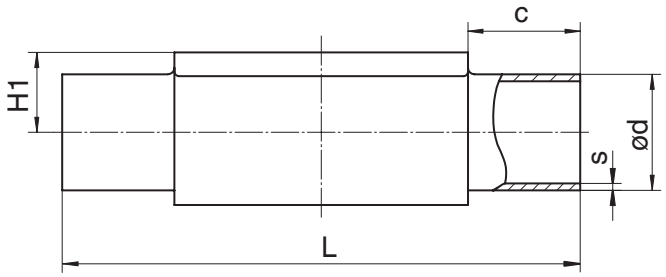

Connection type spigot JIS/SMS (code 35, 36, 37) [1], forged material (code 40, 42, F4) [2]

MG	DN	NPS	c (min)	ød			H1	L	s		
				Connection type					Connection type		
				35	36	37			35	36	37
25	**15**	**1/2"**	25.0	-	21.7	-	19.0	120.0	-	2.10	-
	20	**3/4"**	25.0	-	27.2	-	19.0	120.0	-	2.10	-
	25	**1"**	25.0	25.4	34.0	25.0	19.0	120.0	1.2	2.80	1.2
40	**32**	**1¼"**	25.0	31.8	42.7	33.7	26.0	153.0	1.2	2.80	1.2
	40	**1½"**	30.5	38.1	48.6	38.0	26.0	153.0	1.2	2.80	1.2
50	**50**	**2"**	30.0	50.8	60.5	51.0	32.0	173.0	1.5	2.80	1.2
	65	**2½"**	30.0	63.5	-	63.5	34.0	173.0	2.0	-	1.6

Connection type spigot SMS (code 37) [1], investment casting material (code C3) [2]

MG	DN	NPS	c (min)	ød	H1	L	s
25	**25**	**1"**	25.0	25.0	19.0	120.0	1.2
40	**40**	**1½"**	30.5	38.0	26.0	153.0	1.2
50	**50**	**2"**	30.0	51.0	32.0	173.0	1.2

Dimensions in mm
MG = diaphragm size

1) **Connection type**
Code 35: Spigot JIS-G 3447
Code 36: Spigot JIS-G 3459 schedule 10s
Code 37: Spigot SMS 3008

2) **Valve body material**
Code 40: 1.4435 (F316L), forged body
Code 42: 1.4435 (BN2), forged body, Δ Fe < 0.5%
Code C3: 1.4435, investment casting
Code F4: 1.4539, forged body

Threaded socket DIN (code 1)

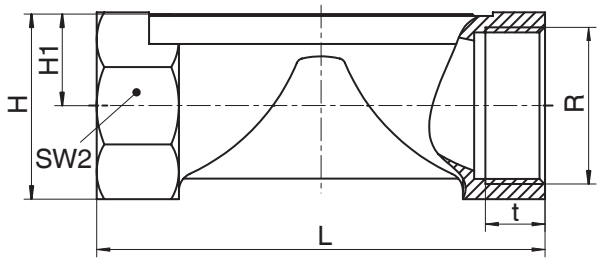

Connection type threaded socket (code 1) [1], investment casting material (code 37) [2]

MG	DN	NPS	H	H1	L	n	R	SW 2	t
25	**15**	**1/2"**	28.3	14.8	85.0	6	G 1/2	27.0	15.0
	20	**3/4"**	33.3	17.3	85.0	6	G 3/4	32.0	16.0
	25	**1"**	42.3	21.8	110.0	6	G 1	41.0	13.0
40	**32**	**1¼"**	51.3	26.3	120.0	8	G 1¼	50.0	20.0
	40	**1½"**	56.3	28.8	140.0	8	G 1½	55.0	18.0
50	**50**	**2"**	71.3	36.0	165.0	8	G 2	70.0	26.0

Connection type threaded socket (code 1) [1], SG iron material (code 90) [2]

MG	DN	NPS	H	H1	L	n	R	SW 2	t
25	**15**	**1/2"**	32.7	16.7	85.0	6	G 1/2	32	15.0
	20	**3/4"**	42.0	21.5	85.0	6	G 3/4	41	16.3
	25	**1"**	46.7	23.7	110.0	6	G 1	46	19.1
40	**32**	**1¼"**	56.0	28.5	120.0	6	G 1¼	55	21.4
	40	**1½"**	66.0	33.5	140.0	6	G 1½	65	21.4
50	**50**	**2"**	76.0	38.5	165.0	6	G 2	75	25.7

Dimensions in mm
MG = diaphragm size
n = number of flats

1) **Connection type**
Code 1: Threaded socket DIN ISO 228

2) **Valve body material**
Code 37: 1.4408, investment casting
Code 90: EN-GJS-400-18-LT (GGG 40.3)

Threaded socket NPT (code 31)

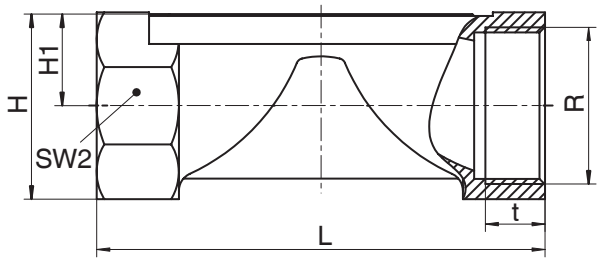

Connection type threaded socket NPT (code 31) [1], investment casting material (code 37) [2]

MG	DN	NPS	H	H1	L	n	R	SW 2	t
25	**15**	**1/2"**	28.3	14.8	85.0	6	NPT 1/2	27.0	14.0
	20	**3/4"**	33.3	17.3	85.0	6	NPT 3/4	32.0	14.0
	25	**1"**	42.3	21.8	110.0	6	NPT 1	41.0	17.0
40	**32**	**1¼"**	51.3	26.3	120.0	8	NPT 1¼	50.0	17.0
	40	**1½"**	56.3	28.8	140.0	8	NPT 1½	55.0	17.0
50	**50**	**2"**	71.3	36.3	165.0	8	NPT 2	70.0	18.0

Connection type threaded socket NPT (code 31) [1], SG iron material (code 90) [2]

MG	DN	NPS	H	H1	L	n	R	SW 2	t
25	**15**	**1/2"**	32.7	16.7	85.0	6	NPT 1/2	32	13.6
	20	**3/4"**	42.0	21.5	85.0	6	NPT 3/4	41	14.1
	25	**1"**	46.7	23.7	110.0	6	NPT 1	46	16.8
40	**32**	**1¼"**	56.0	28.5	120.0	6	NPT 1¼	55	17.3
	40	**1½"**	66.0	33.5	140.0	6	NPT 1½	65	17.3
50	**50**	**2"**	76.0	38.5	165.0	6	NPT 2	75	17.7

Dimensions in mm
MG = diaphragm size
n = number of flats

1) **Connection type**
Code 31: NPT female thread

2) **Valve body material**
Code 37: 1.4408, investment casting
Code 90: EN-GJS-400-18-LT (GGG 40.3)

Threaded spigot DIN (code 6)

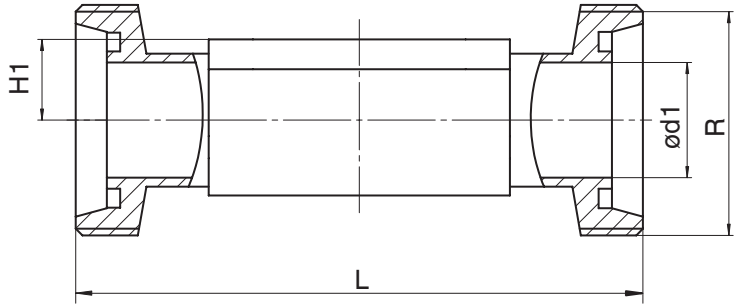

Connection type threaded spigot DIN (code 6) [1], forged material (code 40, 42) [2]

MG	DN	NPS	ød1	H1	L	R
25	**15**	**1/2"**	16.0	19.0	118.0	Rd 34 x 1/8
	20	**3/4"**	20.0	19.0	118.0	Rd 44 x 1/6
	25	**1"**	26.0	19.0	128.0	Rd 52 x 1/6
40	**32**	**1¼"**	32.0	26.0	147.0	Rd 58 x 1/6
	40	**1½"**	38.0	26.0	160.0	Rd 65 x 1/6
50	**50**	**2"**	50.0	32.0	191.0	Rd 78 x 1/6

Dimensions in mm
MG = diaphragm size

1) **Connection type**
Code 6: Threaded spigot DIN 11851

2) **Valve body material**
Code 40: 1.4435 (F316L), forged body
Code 42: 1.4435 (BN2), forged body, Δ Fe < 0.5%

Cone spigot DIN (code 6K)

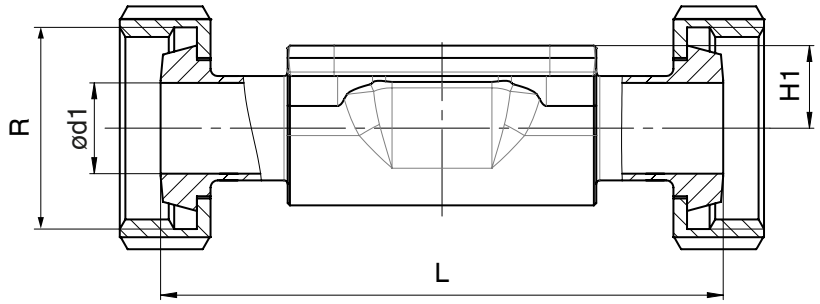

Connection type cone spigot DIN (code 6K) [1], forged material (code 40, 42) [2]

MG	DN	NPS	ød1	H1	L	R
25	**15**	**1/2"**	16.0	19.0	116.0	Rd 34 x 1/8
	20	**3/4"**	20.0	19.0	114.0	Rd 44 x 1/6
	25	**1"**	26.0	19.0	127.0	Rd 52 x 1/6
40	**32**	**1¼"**	32.0	26.0	147.0	Rd 58 x 1/6
	40	**1½"**	38.0	26.0	160.0	Rd 65 x 1/6
50	**50**	**2"**	50.0	32.0	191.0	Rd 78 x 1/6

Dimensions in mm
MG = diaphragm size

1) **Connection type**
Code 6K: Cone spigot and union nut DIN 11851

2) **Valve body material**
Code 40: 1.4435 (F316L), forged body
Code 42: 1.4435 (BN2), forged body, Δ Fe < 0.5%

Flange EN (code 8)

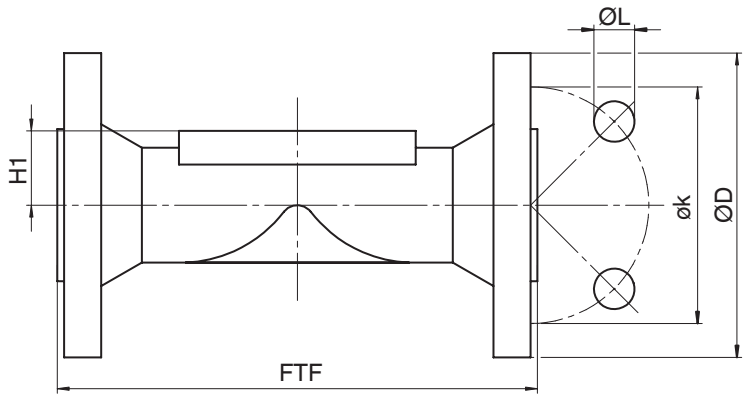

Connection type flange, length EN 558 (code 8) [1], **SG iron material (code 17, 18, 82, 83, 88, 90), investment casting material (code 39, C3), forged material (code 40, 42)** [2]

MG	DN	NPS	øD	FTF		H1				øk	øL	n
				Material		Material						
				17, 18, 39, 82, 83, 88, 90	40, 42, C3	17, 18, 39, 82, 83, 88	40, 42	C3	90			
25	**15**	**1/2"**	95.0	130.0	150.0	18.0	19.0	13.0	14.0	65.0	14.0	4
	20	**3/4"**	105.0	150.0	150.0	20.5	19.0	16.0	16.5	75.0	14.0	4
	25	**1"**	115.0	160.0	160.0	23.0	19.0	19.0	19.5	85.0	14.0	4
40	**32**	**1¼"**	140.0	180.0	180.0	28.7	26.0	24.0	23.0	100.0	19.0	4
	40	**1½"**	150.0	200.0	200.0	33.0	26.0	26.0	27.0	110.0	19.0	4
50	**50**	**2"**	165.0	230.0	230.0	39.0	32.0	32.0	32.0	125.0	19.0	4
	65	**2½"**	185.0	290.0	-	51.0	-	-	38.7	145.0	19.0	4

Dimensions in mm
MG = diaphragm size
n = number of bolt holes

1) **Connection type**
Code 8: Flange EN 1092, PN 16, form B, face-to-face dimension FTF EN 558 series 1, ISO 5752, basic series 1, length only for body configuration D

2) **Valve body material**
Code 17: EN-GJS-400-18-LT (GGG 40.3), PFA lined
Code 18: EN-GJS-400-18-LT (GGG 40.3), PP lined
Code 39: 1.4408, PFA lined
Code 40: 1.4435 (F316L), forged body
Code 42: 1.4435 (BN2), forged body, Δ Fe < 0.5%
Code 82: EN-GJS-400-18-LT (GGG 40.3), soft rubber lined
Code 83: EN-GJS-400-18-LT (GGG 40.3), hard rubber lined
Code 88: EN-GJS-400-18-LT (GGG 40.3), butyl lined
Code 90: EN-GJS-400-18-LT (GGG 40.3)
Code C3: 1.4435, investment casting

Flange JIS (code 34)

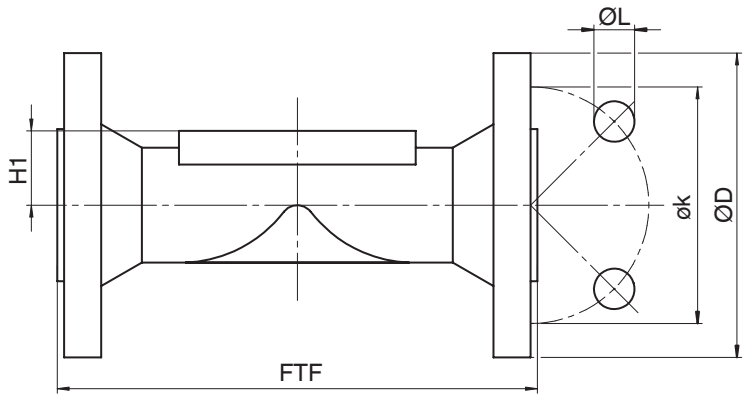

Connection type flange, length 558 (code 34) [1], **investment casting material (code 39)** [2]

MG	DN	NPS	øD	FTF	H1	øk	øL	n
25	15	1/2"	95.0	130.0	18.0	70.0	15.0	4
	20	3/4"	100.0	150.0	20.5	75.0	15.0	4
	25	1"	125.0	160.0	23.0	90.0	19.0	4
40	32	1¼	135.0	180.0	28.7	100.0	19.0	4
	40	1½"	140.0	200.0	33.0	105.0	19.0	4
50	50	2"	155.0	230.0	39.0	120.0	19.0	4

Dimensions in mm
MG = diaphragm size

1) **Connection type**
Code 34: Flange JIS B2220, 10K, RF, face-to-face dimension FTF EN 558 series 1, ISO 5752, basic series 1, length only for body configuration D

2) **Valve body material**
Code 39: 1.4408, PFA lined

Flange ANSI Class (code 38, 39)

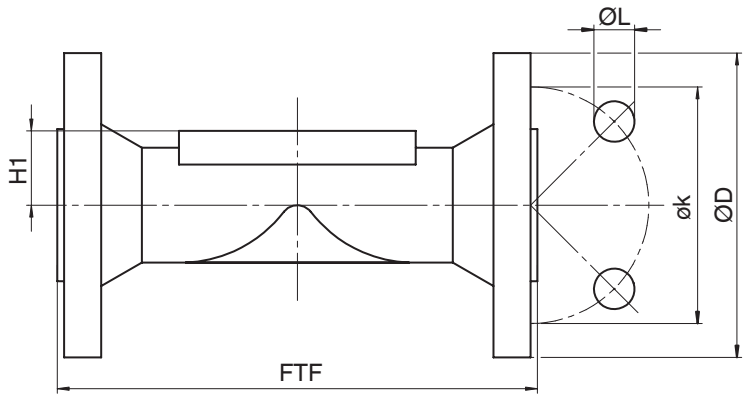

Connection type flange, length MSS SP-88 (code 38) [1], SG iron material (code 17, 18, 82, 83, 88), investment casting material (code 39) [2]

MG	DN	NPS	øD	FTF		H1	øk	øL	n
				Material					
				17, 39	82, 83, 88				
25	**20**	**3/4"**	100.0	146.0	146.4	20.5	69.9	15.9	4
	25	**1"**	110.0	146.0	146.4	23.0	79.4	15.9	4
40	**40**	**1½"**	125.0	175.0	171.4	33.0	98.4	15.9	4
50	**50**	**2"**	150.0	200.0	197.4	39.0	120.7	19.0	4
	65	**2½"**	180.0	226.0	222.4	51.0	139.7	19.0	4

Dimensions in mm
MG = diaphragm size
n = number of bolt holes

1) **Connection type**
Code 38: Flange ANSI Class 150 RF, face-to-face dimension FTF MSS SP-88, length only for body configuration D

2) **Valve body material**
Code 17: EN-GJS-400-18-LT (GGG 40.3), PFA lined
Code 18: EN-GJS-400-18-LT (GGG 40.3), PP lined
Code 39: 1.4408, PFA lined
Code 82: EN-GJS-400-18-LT (GGG 40.3), soft rubber lined
Code 83: EN-GJS-400-18-LT (GGG 40.3), hard rubber lined
Code 88: EN-GJS-400-18-LT (GGG 40.3), butyl lined

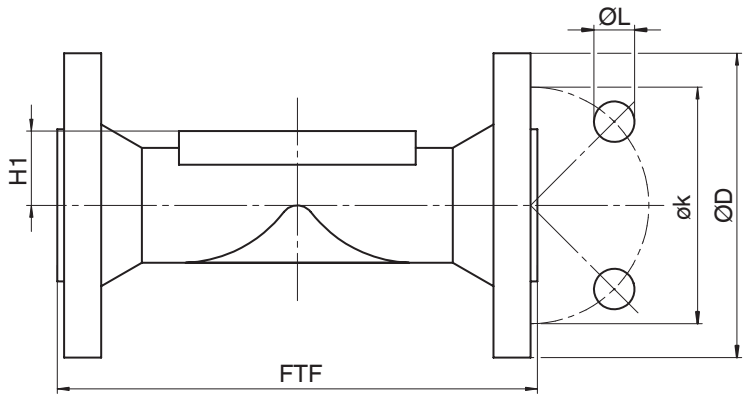

Connection type flange, length EN 558 (code 39) [1], SG iron material (code 17, 18, 82, 83, 88, 90), investment casting material (code 39, C3), forged material (code 40, 42) [2]

MG	DN	NPS	øD	FTF		H1				øk	øL	n
				Material		Material						
				17, 18, 39, 82, 83, 88, 90	40, 42, C3	17, 18, 39, 82, 83, 88	C3	40, 42	90			
25	**15**	**1/2"**	90.0	130.0	150.0	-	13.0	19.0	14.0	60.3	15.9	4
	20	**3/4"**	100.0	150.0	150.0	20.5	16.0	19.0	16.5	69.9	15.9	4
	25	**1"**	110.0	160.0	160.0	23.0	19.0	19.0	19.5	79.4	15.9	4
40	**32**	**1¼"**	115.0	180.0	180.0	28.7	24.0	26.0	23.0	88.9	15.9	4
	40	**1½"**	125.0	200.0	200.0	33.0	26.0	26.0	27.0	98.4	15.9	4
50	**50**	**2"**	150.0	230.0	230.0	39.0	32.0	32.0	32.0	120.7	19.0	4
	65	**2½"**	180.0	290.0	-	51.0	-	-	38.7	139.7	19.0	4

Dimensions in mm
MG = diaphragm size
n = number of bolt holes

1) **Connection type**
Code 39: Flange ANSI Class 125/150 RF, face-to-face dimension FTF EN 558 series 1, ISO 5752, basic series 1, length only for body configuration D

2) **Valve body material**
Code 17: EN-GJS-400-18-LT (GGG 40.3), PFA lined
Code 18: EN-GJS-400-18-LT (GGG 40.3), PP lined
Code 39: 1.4408, PFA lined
Code 40: 1.4435 (F316L), forged body
Code 42: 1.4435 (BN2), forged body, Δ Fe < 0.5%
Code 82: EN-GJS-400-18-LT (GGG 40.3), soft rubber lined
Code 83: EN-GJS-400-18-LT (GGG 40.3), hard rubber lined
Code 88: EN-GJS-400-18-LT (GGG 40.3), butyl lined
Code 90: EN-GJS-400-18-LT (GGG 40.3)
Code C3: 1.4435, investment casting

Clamp (code 80, 82, 88, 8A, 8E, 8P, 8T)

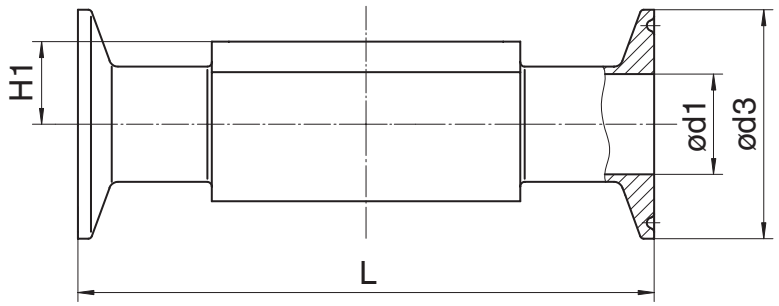

Connection type clamp DIN/ASME (code 80, 88, 8P, 8T) [1], forged material (code 40, 42, F4) [2]

MG	DN	NPS	ød1		ød3		H1	L	
			Connection type		Connection type			Connection type	
			80, 8P	88, 8T	80, 8P	88, 8T		80, 8P	88, 8T
25	**20**	**3/4"**	15.75	15.75	25.0	25.0	19.0	101.6	117.0
	25	**1"**	22.10	22.10	50.5	50.5	19.0	114.3	127.0
40	**40**	**1½"**	34.80	34.80	50.5	50.5	26.0	139.7	159.0
50	**50**	**2"**	47.50	47.50	64.0	64.0	32.0	158.8	190.0
	65	**2½"**	60.20	60.20	77.5	77.5	34.0	193.8	216.0

Connection type clamp DIN/ISO (code 82, 8A, 8E) [1], forged material (code 40, 42, F4) [2]

MG	DN	NPS	ød1			ød3			H1	L		
			Connection type			Connection type				Connection type		
			82	8A	8E	82	8A	8E		82	8A	8E
25	**15**	**1/2"**	18.1	16.0	-	50.5	34.0	-	19.0	108.0	108.0	-
	20	**3/4"**	23.7	20.0	-	50.5	34.0	-	19.0	117.0	117.0	-
	25	**1"**	29.7	26.0	22.6	50.5	50.5	50.5	19.0	1270	127.0	127.0
40	**32**	**1¼"**	38.4	32.0	31.3	64.0	50.5	50.5	26.0	146.0	146.0	146.0
	40	**1½"**	44.3	38.0	35.6	64.0	50.5	50.5	26.0	159.0	159.0	159.0
50	**50**	**2"**	56.3	50.0	48.6	77.5	64.0	64.0	32.0	190.0	190.0	190.0
	65	**2½"**	-	-	60.3	-	-	77.5	34.0	-	-	216.0

Dimensions in mm
MG = diaphragm size

1) **Connection type**
Code 80: Clamp ASME BPE, face-to-face dimension FTF ASME BPE, length only for body configuration D
Code 82: Clamp DIN 32676 series B, face-to-face dimension FTF EN 558 series 7, length only for body configuration D
Code 88: Clamp ASME BPE, for pipe ASME BPE, face-to-face dimension FTF EN 558 series 7, length only for body configuration D
Code 8A: Clamp DIN 32676 series A, face-to-face dimension FTF acc. to EN 558 series 7, length only for body configuration D
Code 8E: Clamp ISO 2852 for pipe ISO 2037, clamp SMS 3017 for pipe SMS 3008 face-to-face dimension FTF EN 558 series 7, length only for body configuration D
Code 8P: Clamp DIN 32676 series C, face-to-face dimension FTF ASME BPE, length only for body configuration D
Code 8T: Clamp DIN 32676 series C, face-to-face dimension FTF EN 558 series 7, length only for body configuration D

2) **Valve body material**
Code 40: 1.4435 (F316L), forged body
Code 42: 1.4435 (BN2), forged body, Δ Fe < 0.5%
Code F4: 1.4539, forged body



Subject to alteration | 03.2025 | 88048768

GEMÜ Gebr. Müller Apparatebau GmbH & Co. KG
Fritz-Müller-Straße 6-8, 74653 Ingelfingen-Criesbach, Germany
Phone +49 (0) 7940 1230 · info@gemue.de
www.gemu-group.com