Data sheet **Pneumatically-operated valves, type HP**

Terminology

To obtain optimum function and the greatest reliability it is necessary to know the following terms:

The capacity factor (k_v value) expresses the amount of water measured in m^3 per hour that flows through the open valve when there is a pressure drop across it (differential presssure from inlet to outlet) of 1 bar. A pressure of 1 bar is equal to 0.1 MPa and can be compared to 1 atmosphere. The k_v value is thus a standard capacity designation for the conditions specified. Capacities for HP valves are given by the graph on page 7.

Media HP valves are suitable for the media perchlorethylene, trichlorethylene, R 11, R 113, air, oil and water.
Max. viscosity 400 cSt (50°E).

A list of materials for parts in contact with media is given on page 5.

Differential pressure (Δp) is the difference between inlet and outlet pressures (often called "pressure drop").

Test pressure is the permissible pressure a valve can be subjected to during, for example, a leak test on a system. Valve function cannot be assured under such conditions.

Control pressure is the pressure necessary to ensure the valve opening function and eventually the valve closing function.

Technical data and code numbers

Connection	k_v value (m^3/h at Δp = 1 bar)	Type	Code numbers	
			Spring return	Compressed air return
G ½	7	HP 15		**042N0170**
			042N0172	
G ¾	9	HP 20		**042N0180**
			042N0182	
G 1	15	HP 25		**042N0190**
			042N0192	
G 1¼	32	HP 32		**042N0200**
			042N0202	
G 1½	33	HP 40		**042N0210**
			042N0212	
G 2	55	HP 50		**042N0220**
			042N0222	

Media, temperature and pressure

Medium	Permissible differential pressure bar	Permissible temperature of medium °C	Permissible test pressure bar
Water	0 - 10	0 - 60	16
Air	0 - 10	0 - 60	
Mineral oil	0 - 10	0 - 100	
Trichlorethylene Perchlorethylene R 11, R 113	0 - 3.5	0 - 80	

Control air connection: G ⅛ int.
Control air pressure, see page 5.

Data sheet

Pneumatically-operated valves, type HP

Connection example

HP valve, closed

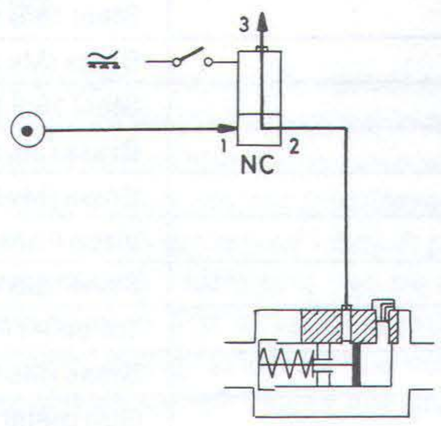

HP valve, open

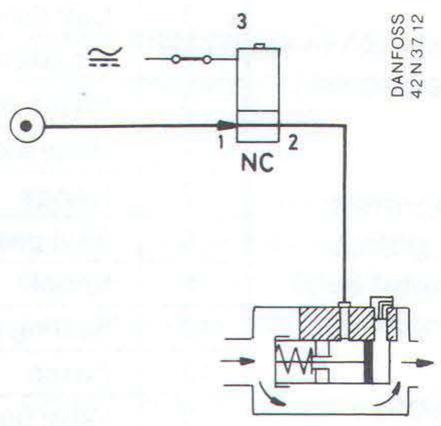

Valve type HP with spring return, controlled by one three-way solenoid valve, NC version.

HP valve, closed

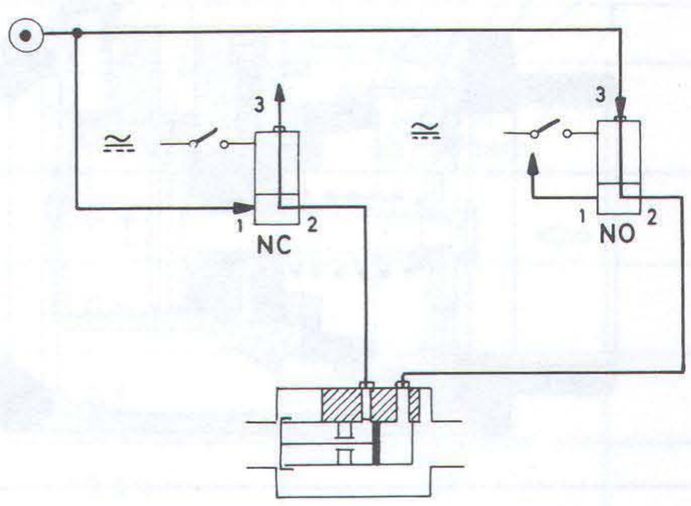

HP valve, open

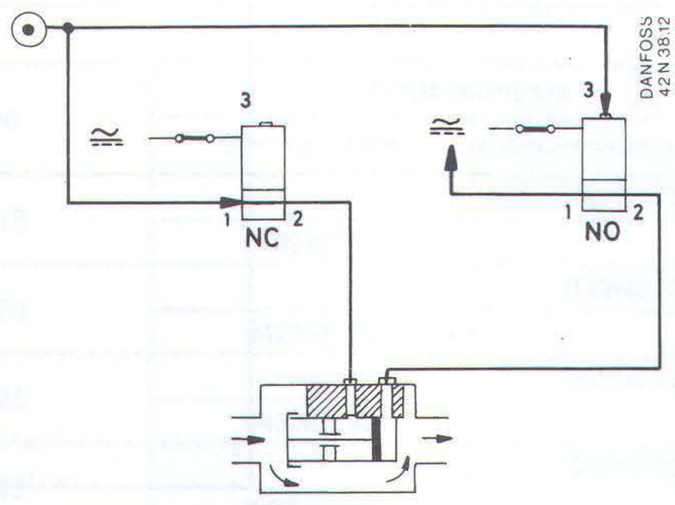

Valve type HP with compressed air return, controlled by two three-way solenoid valves.

Installation and maintenance

Before installing the valve, remove foreign particles (swarf, packing materials, etc.). HP valves will function in any position.

Cleaning
After removing the screws from the flanges, open the valve with control air before removing to avoid damage to seat gasket, the valve can then be flushed while held open.

Dimensions and weights

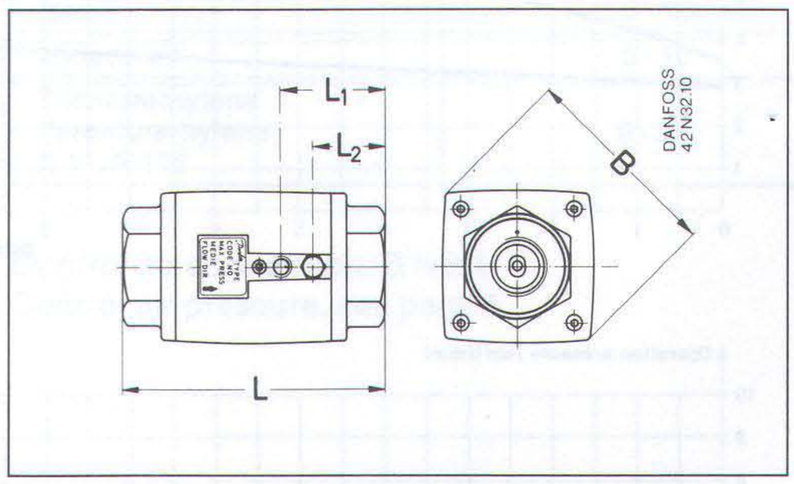

Type	Con-nect.	L	L_1	L_2	B	Weight kg
HP 15	G ½	116	49	32	66	1.2
HP 20	G ¾	116	49	32	66	1.1
HP 25	G 1	127	51	34	73	1.5
HP 32	G 1¼	140	54	37	86	2.1
HP 40	G 1½	140	54	37	86	2.0
HP 50	G 2	161	64	47	112	3.5

Accessories and spare parts

Flange gaskets
Pneumatic and spring return

Type	Code no.
HP 15-20	**042N0132**
HP 25	**042N0133**
HP 32-40	**042N0134**
HP 50	**042N0135**

Complete insert and flange gaskets

Type	Code no.	
	Pneumatic return	Spring return
HP 15-20	**042N0110**	**042N0114**
HP 25	**042N0111**	**042N0115**
HP 32-40	**042N0112**	**042N0116**
HP 50	**042N0113**	**042N0117**