บริษัท เอดีดี เฟอร์เนส จำกัด
Add Furnace Co.,Ltd.
44 ซ.บรมราชชนนี 70 ถ.บรมราชชนนี ศาลาธรรมสพน์ ทวีวัฒนา กทม. 10170.
website: https://www.add-furnace.com/ โทร: 02-888-3472
Line ID: @add11 e-mail: add028883472@gmail.com

64 Series Pressure Reducing Regulators



W1943

Figure 1. *64 Series Regulator*

Introduction

Scope of Manual

This manual provides instructions for the installation, adjustment, maintenance, and parts ordering for 64 Series regulators. These regulators usually are shipped separately for line or panel mounting or installed on other equipment. Instructions and parts lists for other equipment are found in separate manuals.

Product Description

The 64 Series regulators are spring-loaded, direct-operated devices typically used to deliver constant reduced pressure of gaseous fluids to pilot-operated controllers and other pneumatic instrumentation.

Type 64: Basic regulator for 3 to 15 psig (0,21 to 1,03 bar) outlet pressures

Type 64R: Internal relief version of the Type 64

Type 64B: NH_3 - service version of the Type 64

D100316X012

บริษัท เอดีดี เฟอร์เนส จำกัด
Add Furnace Co.,Ltd.
44 ซ.บรมราชชนนี 70 ถ.บรมราชชนนี ศาลาธรรมสพน์ ทวีวัฒนา กทม. 10170.
website: https://www.add-furnace.com/ โทร: 02-888-3472
Line ID: @add11 e-mail: add028883472@gmail.com

Specifications

Connections

End: 1/2-inch NPT
Body Side: 1/4-inch NPT

Maximum allowable Pressures[1]

Inlet: 250 psig (17,2 bar)
Operating Outlet: 150 psig (10,3 bar)

Outlet Pressure Ranges[1]

See Table 1

Port Diameter

1/4-inch (6,35 mm)

Pressure Registration

Internal

Material Temperature Capabilities[1]

-20° to 150°F (-29° to 66°)

Spring Case Vent

1/4-inch NPT with screen

Weight

2.25 pounds (1,01 kg)

Options

- losing cap for adjusting cap screw
- Triple scale outlet pressure gauge (brass or stainless steel)
- PTFE diaphragm protector

1. The pressure/temperature limits in this instruction manual or any applicable standard limitation should not be exceeded.

The Type 64R has an integral low-capacity relief valve. The valve stem seats against a drilled hole in the diaphragm plate. If the reduced pressure should exceed the set pressure, the diaphragm lifts off the valve stem so that a limited amount of excess pressure can flow into the spring case and bleed out through a screened vent.

A 64 Series regulator is also available with a handwheel. An optional handwheel is available for panel mounting.

Installation

! WaRnIng

Overpressuring a regulator or associated equipment may cause leakage, part damage, or personal injury due to bursting of pressure containing parts or explosion of accumulated gas. To avoid overpressure, provide an appropriate overpressure protection device (i.e., a relief valve) to ensure that the ratings listed in Specifications section will not be exceeded. a regulator should be inspected immediately for damage after any overpressure condition.

บริษัท เอดีดี เฟอร์เนส จำกัด
Add Furnace Co.,Ltd.
44 ซ.บรมราชชนนี 70 ถ.บรมราชชนนี ศาลาธรรมสพน์ ทวีวัฒนา กทม. 10170.
website: https://www.add-furnace.com/ โทร: 02-888-3472
Line ID: @add11 e-mail: add028883472@gmail.com

Table 1. *Outlet Pressure Ranges and Spring Selection*

OuTlET PRESSuRE RangE[1], PSIg (bar)	SPRIng PaRT nuMBER	SPRIng COlOR
3 to 15 (0,21 to 1,03)	1D892327022	Red
3 to 20 (0,21 to 1,38)	1D751527022	Silver
5 to 35 (0,34 to 2,41)	1D665927022	Blue
30 to 60 (2,07 to 4,14)	1D745527142	Green
35 to 100 (2,41 to 6,90)	1E543627142	Yellow
80 to 150[2] (5,52 to 10,3)[2]	1P901327142	Brown

1. All springs can be backed off to 0 psig (0 bar). For the highest capacity and most accurate control, use the lowest-range spring that can be adjusted to the required setpoint.
2. Cannot be used in anhydrous ammonia (NH_3) applications.

1. Use qualified personnel when installing, operating, and maintaining these regulators. Before installation inspect for damage. Make sure there is not any foreign material in the regulator and all tubing and piping are clean and unobstructed.

2. If installing the regulator at an outside location, point the spring case vent in the downward direction to protect it from getting plugged or from collecting moisture, corrosive chemicals, or other foreign materials. Spring case vent orientation may be changed by rotating the spring case with respect to the regulator body.

3. Install the regulator so that flow is from the IN to OUT connection as marked on the regulator body.

! WaRnIng

If using this regulator on hazardous gas or flammable fluid, make sure that the vented gas is piped to a safe, well-ventilated area. Do not install a regulator so that the gas will be vented into a closed space. This could result in a fire or explosion which could cause personal injury or equipment damage.

4. To remotely vent the spring case, remove the screen, if present, and connect 1/4-inch NPT piping or tubing to the spring case connection. The piping or tubing should vent the spring case to a safe location, have as few bends as possible, and have a screened vent on its exhaust end that is weather resistant and always pointed in the downward direction.

5. Like most regulators, 64 Series regulators have outlet pressure ratings lower than inlet pressure ratings. Although types with internal relief include limited downstream overpressure protection, all types may require additional relief protection for some service conditions if the actual inlet pressure can exceed the regulator outlet pressure rating or the pressure ratings of any downstream equipment. Inspect a regulator periodically and after any overpressure condition.

6. Each regulator is factory-set for the pressure setting specified on the order. If no setting is specified, outlet pressure is factory-set at the midrange of the control spring.

Startup

Key numbers are referenced in Figure 2.

1. Slowly open the upstream and downstream shutoff valves while monitoring the outlet pressure with a gauge installed at some point downstream from the regulator. Pressure may also be monitored by installing a pressure gauge in the unused outlet connection.

2. If it is necessary to adjust the regulator:

- Loosen the locknut (key 13).
- Turn the adjusting screw (key 12) while monitoring the pressure. Turn clockwise to increase the set pressure; turn counterclockwise to decrease the set pressure.
- Tighten the locknut after adjustment is made.

Shutdown

1. Close the upstream shutoff valve.

2. Close the downstream shutoff valve.

3. If vent valves are installed, open the vent valve between the regulator and the downstream shutoff valve. Then, open the vent valve between the regulator and the upstream shutoff valve.

4. If vent valves are not installed, safely bleed off both inlet and outlet pressures, and check that the regulator contains no pressure.

Maintenance

Regulator parts are subject to normal wear and must be inspected and replaced as necessary. The frequency of inspection and replacement of parts depends upon the severity of service conditions as well as the requirements of local, state, and federal regulations.

! WaRnIng

To avoid personal injury or equipment damage from sudden release of pressure or explosion of accumulated gas, do not attempt any maintenance or disassembly without first isolating the regulator from system pressure and relieving all internal pressure from the regulator.

Disassembly

note

The body assembly (key 1) may remain mounted in a line or panel or on other equipment during disassembly as long as the entire regulator does not have to be replaced.

The following procedure describes how to completely disassemble the regulator. When part replacement or inspection is required, complete only those steps necessary to accomplish the task, and then start the assembly at the appropriate step. Key numbers are referenced in Figure 2.

1. Remove closing cap (not shown), if used.

2. Loosen locknut (key 13), and turn adjusting screw (key 12) counterclockwise so that spring tension is relieved.

3. Remove the cap screws and nuts (keys 14 and 15) that hold the spring case (key 2) on the body (key 1). Then, remove the spring case, regulator spring (key 4), and upper spring seat (key 11).

4. Remove the diaphragm assembly (key 9).

5. Unscrew and remove the stem guide (key 8) from the valve body.

6. Remove the stem seal O-ring (key 5) from the body. If the O-ring is to be replaced, it should be lubricated.

7. Unscrew the body plug (key 10). This permits removal of the valve spring (key 3) and the disk holder assembly (key 6).

Spring Installation

Reassemble in the reverse of the above procedures.

1. Lubricate the upper spring seat and the exposed threads of the adjusting screw with Anti-Seize lubricant.

บริษัท เอดีดี เฟอร์เนส จำกัด
Add Furnace Co.,Ltd.
44 ซ.บรมราชชนนี 70 ถ.บรมราชชนนี ศาลาธรรมสพน์ ทวีวัฒนา กทม. 10170.
website: https://www.add-furnace.com/ โทร: 02-888-3472
Line ID: @add11 e-mail: add028883472@gmail.com

2. Position the spring case (key 2) over the spring and onto the regulator body (key 1). Orient the spring case vent as necessary.

3. Insert the cap screws and nuts (keys 14 and 15), and tighten them only finger tight.

4. Thread the adjusting screw and locknut (keys 12 and 13) into the spring case just far enough to slightly compress the spring.

5. Securely tighten the cap screws (key 14), and refer to the Startup section for adjustment procedures.

Parts Ordering

When corresponding with the Fisher sales office or sales representative about this regulator, include the type number and all other pertinent information stamped on the bottom cap and on the label. Specify the complete 11-character part number from the following parts list when ordering replacement parts.

naCE Standard MR0175 Compliance

Optional materials are available for applications handling sour gases. These constructions comply with the recommendations of National Association of orrosive Engineers (NA E) MR0175.

Parts ist

Key	Description	Part number
	Parts Kits (Included are keys 3, 5, 6, 7, 8, 9 and 16)	
	3 to 150 psig (0,21 to 10,3 bar)	
	Type 64, standard construction	R64X0000012
	Type 64, NA E construction	R64X0000N12
	Type 64R	R64RX000012
	Type 64B	R64BX000012
	130 to 200 psig (8,96 to 13,8 bar)	
	Type 64	R64X0000H22
	Type 64R	R64RX000H22
1	Body, aluminum	T1063708012
2	Spring ase	
	For use with adjusting screw, aluminum	2P901508012
	For use with handwheel, aluminum	1F8095000A2
	For panel mounting, cast iron	2E542919042
3	Valve Plug Spring, steel	
	Types 64 and 64R	1D666827222
	Type 64B	T1114337022
	NA E, heat-treated Inconel(1)	19A2859X012
4	ontrol Spring	See Table 1
5	O-Ring	
	Nitrile	1D6825T0012
	FKM	1D6825X0012
	Nitrile (NH_3)	1D682506992
6	Disk Holder Assembly	
	Brass/FKM	1D6656T0012
	Types 64 and 64R	1D6656000A2
	Type 64B	1D6656X0032
	NA E, nitrile rubber/316 stainless steel	1D6656X0032
7	Stem	
	Types 64 and 64B	
	303 stainless steel	1D963835172
	NA E, 316 stainless steel	1D9638X0012
	Type 64R	
	303 stainless steel	1H911035172
	NA E, 316 stainless steel	1D9638X0012
8	Stem Guide	
	Types 64 and 64R, brass	1D666914092
	Type 64B, brass	T11083X0012
	NA E, 316 stainless steel	1D6669X0012
9	Diaphragm Assembly for specified spring ranges	
	Type 64	
	3 to 150 psig (0,21 to 10,3 bar), steel, aluminum, nitrile	1D6662X0022
	Type 64R	
	3 to 150 psig (0,21 to 10,3 bar)	
	Steel, brass, nitrile	1H9112000A2
	FKM	1H9112T0012
	Type 64B	
	3 to 100 psig (0,21 to 6,90 bar), nitrile	T11059000A2
10	Body Plug, aluminum	1D665209012
11	Upper Spring Seat	
	Steel	1D667125072
	Type 64R NA E, plated heat-treated low-carbon steel	1D6671X0012
12	Adjusting Screw Assembly	
	Adjusting screw	1D995448702
	l Spring ase	1E543214012
	Handwheel assembly	1J4965000A2
	Panel mounting assembly	1N2005000A2
13	Locknut, steel	1D667728982
14	ap Screw, plated steel (8 required) For	
	aluminum spring case	1A391724052
	For cast iron spring case	1P327028982

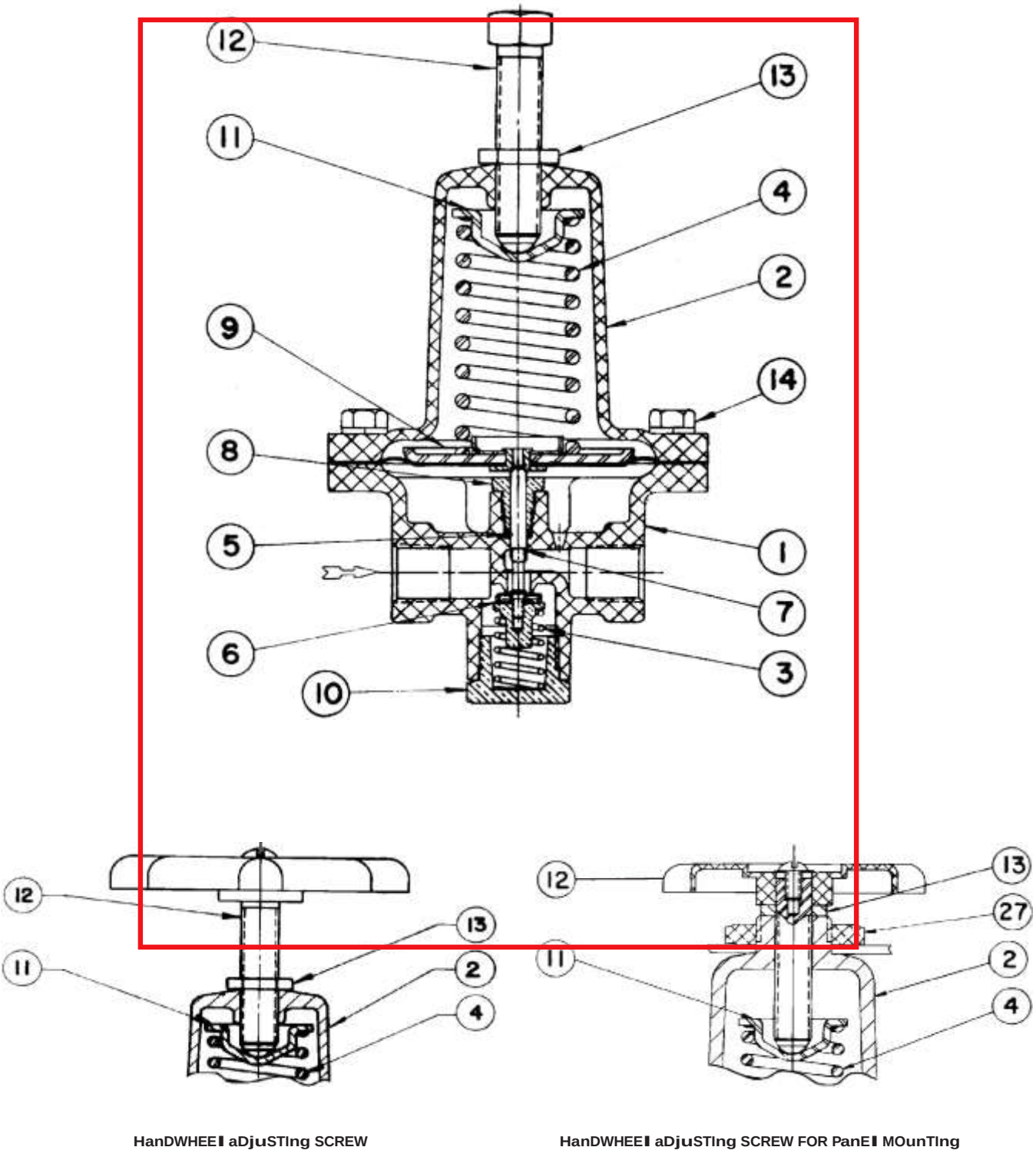

AH9113-E
10A6399-A
AN9265-D
B1471

Figure 2. *Type 64R Regulator Assembly*

บริษัท เอดีดี เฟอร์เนส จำกัด
Add Furnace Co.,Ltd.
44 ซ.บรมราชชนนี 70 ถ.บรมราชชนนี ศาลาธรรมสพน์ ทวีวัฒนา กทม. 10170.
website: https://www.add-furnace.com/ โทร: 02-888-3472
Line ID: @add11 e-mail: add028883472@gmail.com

Table 2. *Key 25 Bottom-Connected Gauge*

CalIBRaTIOn, PSIg (bar)	PaRT nuMBER
0 to 15 (0 to 1,03) 0 to 30 (0 to 2,07) 0 to 60 (0 to 4,14) 0 to 160 (0 to 11,0)	11B8579X012 11B8579X022 11B8579X032 11B8579X042
0 to 300 (0 to 20,7)	11B8579X052

Key	Description	Part number
16	Vent or Screen, stainless steel (not shown)	0L078343062
19	Adjusting Screw cap, for cast iron spring case only (not shown)	20B3082X012
24	Drive Screw, plated steel (4 required), for cast iron spring case	1E501728982
25	Gauge	See Table 2
27	Locknut, aluminum, for cast iron spring case	1N936009012
42	NAME Tag, 18-8 stainless steel (not shown)	19A6034X012
43	Tag Wire, 304 stainless steel (not shown)	1U7581X0022

Optional 657 or 667 Series actuator Mounting Parts—(not shown)

Key	Description	Part number
	Mounting Bracket	
	casing mounting for size 80, plated steel	1E456825062
	casing mounting for smaller sizes, steel	1H925525022
	Yoke mounting for all sizes, steel	1E204225092
	cap Screw	
	casing mounting, plated steel (2 required)	A6856228992
	Yoke mounting, plated steel	1A631224052

บริษัท เอดีดี เฟอร์เนส จำกัด
Add Furnace Co.,Ltd.

44 ซ.บรมราชชนนี 70 ถ.บรมราชชนนี ศาลาธรรมสพน์ ทวีวัฒนา กทม. 10170.
website: https://www.add-furnace.com/ โทร: 02-888-3472
Line ID: @add11 e-mail: add028883472@gmail.com

บริษัท:	**บริษัท เอดีดี เฟอร์เนส จำกัด** Add Furnace Co.,Ltd.
ที่อยู่:(bangkok)	44 ซ.บรมราชชนนี 70 ถ.บรมราชชนนี ศาลาธรรมสพน์ ทวีวัฒนา กทม. 10170.
website:	https://www.add-furnace.com/
e-mail:	sales@add-furnace.com add028883472@gmail.com
โทร.(ออกแบบ):	08-08-170-170, 088-300-1122
โทร:	02-888-3472
Online Support:	Line ID: @add11 Wechat ID: add0883001122
แฟกซ์:	02-888-3258
line ID:	@add11