Needle Valves

Index

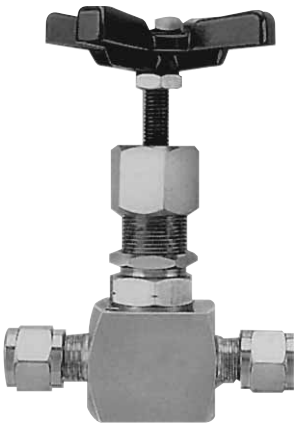

needle valves

CRANE Instrumentation & Sampling, HOKE®
PO Box 4866 • Spartanburg, SC 29305-4866
(864) 574-7966 • www.hoke.com

For Your Safety

It is solely the responsibility of the system designer and user to select products suitable for their specific application requirements and to ensure proper installation, operation, and maintenance of these products. When selecting products, the total system design must be considered to ensure safe, trouble-free performance. Material compatibility, product ratings and application details should be considered in the selection. Improper selection or use of products described herein can cause personal injury or property damage.

Contact your authorized HOKE® sales and service representative for information about additional sizes and special alloys.

SAFETY WARNING:

HOKE® products are designed for installation only by professional suitably qualified licensed system installers experienced in the applications and environments for which the products are intended. These products are intended for integration into a system. Where these products are to be used with flammable or hazardous media, precautions must be taken by the system designer and installer to ensure the safety of persons and property. Flammable or hazardous media pose risks associated with fire or explosion, as well as burning, poisoning or other injury or death to persons and/or destruction of property. The system designer and installer must provide for the capture and control of such substances from any vents in the product(s). The system installer must not permit any leakage or uncontrolled escape of hazardous or flammable substances. The system operator must be trained to follow appropriate precautions and must inspect and maintain the system and its components including the product(s) and at regular intervals in accordance with timescales recommended by the supplier to prevent unacceptable wear or failure.

Needle Valves at a Glance

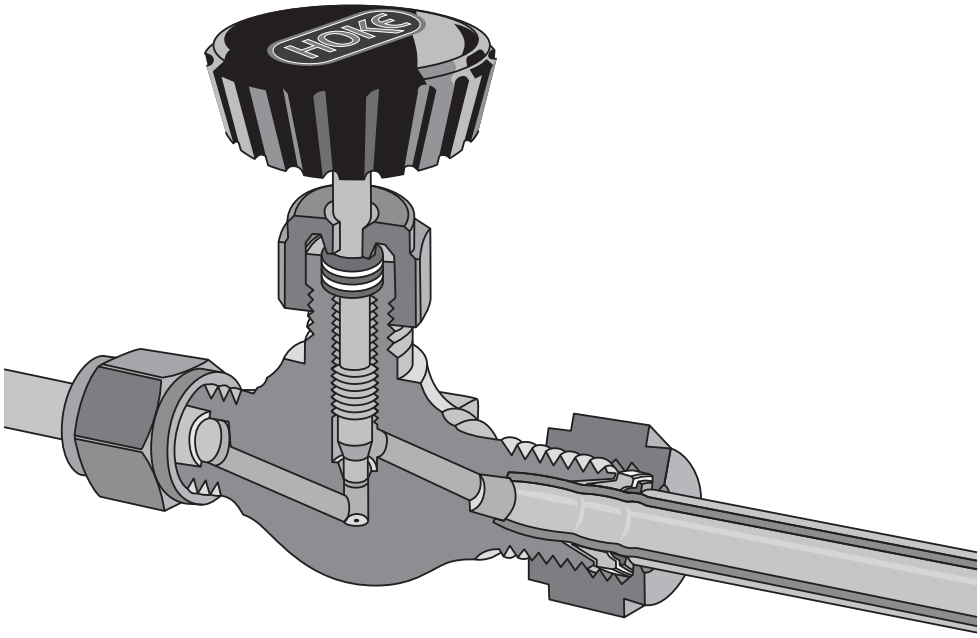

HOKE® manufactures a complete line of precision needle valves. Before making your valve selection, be sure to consider the system pressure, operating temperature, required flow and materials of construction. If your application requires a valve not available in this catalog, please contact your HOKE® stocking distributor or call HOKE® at (864) 574-7966.

In addition to the needle valves in this catalog, HOKE® manufacturers other lines of specialty needle valves:

- Cylinder valves provide safe flow control for filling and draining cylinders. Valves are available with burst disks, spring relief devices, and metal or PCTFE stem tips. For more information, refer to HOKE®'s Sampling Cylinders and Accessories catalog (PN 79008).
- Gauge valves are typically used for calibration, isolation, and bleeding of gauges and other instruments. They allow for safe installation and removal of instruments and provide multiple mounting positions. For more information, refer to HOKE®'s Fluid Control Component catalog (PN 79020).
- Plug valves are used in applications where instant on/off service is necessary. HOKE® plug valves are available in quarter-turn (7300 series) or rising stem (7400 series) models. Both designs include a straight through bore, which provides maximum flow and rodability. For more information, refer to the 7300 series catalog (PN 79039) and the 7400 series Catalog (PN 78165).

Needle Valves at a Glance

	SERIES	DESCRIPTION/APPLICATIONS	FEATURES	STANDARD BODY MATERIAL
	1700 Series (pg. 5)	• Panel board instrumentation • Pressure gauge valves • Sampling systems • Research laboratories • Oxygen service • Corrosive or high pressure service • Cylinder Valves	• Dyna-Pak® packing • Long cycle life • Broad selection of fitting connections	316 stainless steel MONEL®
	2100 Series (pg. 8)	• Hydraulic systems • High temperature service • Gas sampling • Test stands	• Choice of Dyna-Pak® or Graph-Lock® high temperature packing • High pressure capability • Choice of all metal stem or metal stem with PCTFE stem tip	Brass 316 stainless steel Carbon steel
	2200 Series (pg. 12)	• Corrosive handling • Sampling systems • Metering service	• Long service life • Extended temperature range • Dyna-Pak® packing	316 stainless steel
	2219 Series (pg. 16)	• Severe service applications • Steam service in power plants • Hot condensates	• Meets ANSI 900# specifications • High pressure/high temperature design • Bubble-tight leak testing at both seat and packing	316 stainless steel
	3700, 3800 and 3900 Series (pg. 20)	• Instrument air lines • Sampling • Gas chromatography • Cylinder valves • Test stands	• Choice of stem tips • Dyna-Pak® packing • Broad selection of connection options • Optional color-coded handles for fluid identification	Brass 316 stainless steel Carbon steel MONEL®

Needle Valves at a Glance

MAX. OPERATING PRESSURE @70° F (21° C)	OPERATING TEMP. RANGE	C_V FLOW RANGE (VARIES W/ END CONN.)	ORIFICE SIZES	STANDARD END CONNECTIONS
6000 psig (414 Bar)	**Metal stem tip:** -65° F to +450° F (-54° C to +232° C) **PCTFE stem tip:** -20° F to +250° F (-29° C to +121° C)	0.31-0.45	0.187″ (4.8 mm)	¼″, ⅜″ GYROLOK® ¼″ Male NPT ¼″ Female NPT 8 mm GYROLOK®
Brass: 3000 psig (207 Bar) **Stainless steel:** 6000 psig (414 Bar) **Carbon steel:** 5000 psig (345 Bar)	**Dyna-Pak®/metal stem tip:** -65° F to +450° F (-54° C to +232° C) **Dyna-Pak®/PCTFE stem tip:** -20° F to +250° F (-29° C to +121° C) **Graph-Lock®/metal stem tip:** -60° F to +600° F (-51° C to +316° C)	0.40 to 1.20	0.188″ to 0.313″ (4.8 mm to 8.0 mm)	¼″, ⅜″, ½″ GYROLOK® ½″ Male NPT ¼″, ⅜″, ½″ Female NPT
5000 psig (345 Bar)	-65° F to +450° F (-54° C to +232° C)	0.12 to 1.4	0.086″ to 0.313″ (2.2 mm to 8.0 mm)	¼″, ⅜″, ½″ GYROLOK® ½″ Male NPT ¼″, ⅜″, ½″ Female NPT 10, and 12 mm GYROLOK®
6000 psig (414 bar)	-100 to +1000 (-75 to +538	0.47, 1.09, 1.20 (Cv factor for 0.437″ orifice not available at time of publication)	0.170″ (4.3 mm), 0.250″ (6.4 mm), 0.312″ (7.9 mm) 0.437″ (11.1 mm)	¼″, ½″, ¾″ 1″ GYROLOK® ¼″, ½″, ¾″, 1″ Female NPT ⅜″, ½″, ¾″ 1″ Tube socket weld ⅜″, ½″, ¾″ 1″ NPS socket weld 12 mm, 22 mm, 25 mm GYROLOK®
316 SS, CS & MONEL®: 5000 psig (345 Bar) **Brass:** 3000 psig (207 Bar)	**Metal stem tip:** -65° F to +450° F (-54° C to +232° C) **PCTFE stem tip:** -20° F to +250° F (-29° C to +121° C)	0.07 to 1.1	0.06″ to 0.312″ (1.5 mm to 7.9 mm)	⅛″, ¼″, ⅜″, ½″ GYROLOK® ⅛″, ¼″, ⅜″ Male NPT ⅛″, ¼″, ½″ Female NPT 3, 6, 8, 10, and 12 mm GYROLOK®

Needle Valves at a Glance

Dyna-Pak® Stem Packing System

Dyna-Pak® provides superior sealing performance while reducing maintenance costs. Consisting of alternate wafers of TFE and metal spacers, stem leakage is virtually eliminated while the problems associated with TFE cold flow are minimized.

As the packing nut is tightened, metal spacers squeeze the TFE wafers, driving the TFE against the stem. At the stem, forces are concentrated and the TFE wafers provide multiple line seals. In addition to squeezing the TFE wafers, the metal spacers help contain the TFE and drastically reduce its ability to creep.

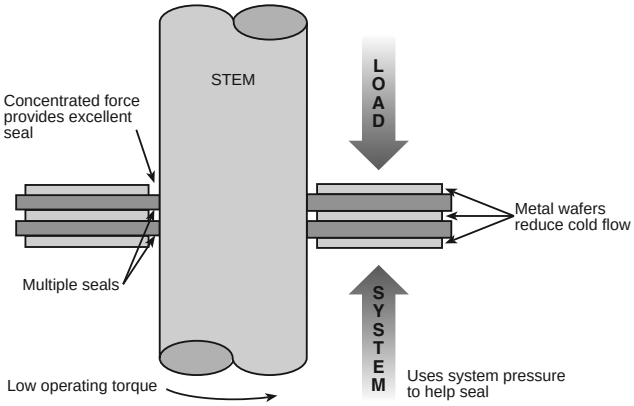

Dyna-Pak® packing has the ability to:

- Utilize system pressure to increase effectiveness in eliminating leakage
- Provide reduced operating torque
- Help eliminate fugitive emissions
- Reduce the need for frequent packing adjustments
- Operate in temperatures from -65° to +450° F (-54° to +232° C)

HOKE® Needle Valves are Offered With a Choice of Stem Tip Options to Provide Greater Flexibility

Blunt Vee-Point The blunt vee-point stem tip provides full flow with only a few turns of the valve handle

Regulating The regulating stem tip has a gradually tapered tip which allows for greater control of flow.

Non-rotating Metal Stem Tip
A non-rotating stem tip is typically used in high cycle applications to extend the service life of the valve. Its purpose is to prevent galling in the seat and on the stem tip. As the valve is closed, the stem tip contacts the valve seat, and is driven straight into it without rotating.

Vee-Point The vee-point stem tip is used to provide leak-tight shutoff in small orifice valves.

PCTFE A PCTFE stem tip requires a lower seating torque than a metal stem tip. It will provide full flow through the valve with only a few handle turns. The PCTFE tip is replaceable and has a maximum temperature of +250° F (+121° C)

Non-rotating PCTFE Stem Tip
A non-rotating PCTFE stem tip operates in the same fashion as the non-rotating metal stem tip but requires less seating torque.

Flow capacity of HOKE® Needle Valves

The Cv factor is a flow coefficient expressing the rate of flow in gallons per minute of 60° F (16° C) water with a pressure drop of 1 psi across the valve. The flow is dependent on the inlet and outlet pressures, temperature, specific gravity and the Cv coefficient.

To determine the Cv or flow of a **liquid** @ 60° F (16° C):

$$\mathbf{Cv} = \frac{\text{GPM}}{\sqrt{\frac{\Delta p}{\text{S.G.}}}} \quad \text{or} \quad \mathbf{GPM} = \text{Cv}\sqrt{\frac{\Delta p}{\text{S.G.}}}$$

where:
$\Delta p = p_1 - p_2$
p_1 = inlet pressure in psia
p_2 = outlet pressure in psia
GPM = flow in gallons per minute
S.G. = specific gravity of liquid where water = 1 @ 60° F (16° C)

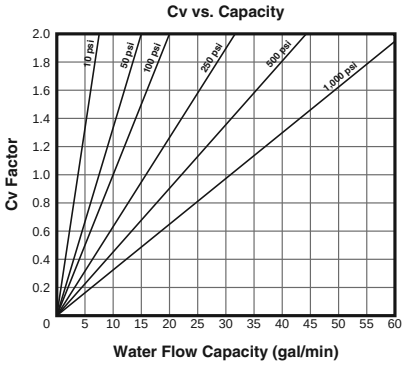

To determine the Cv or flow of a **gas** @ 70° F (21° C):

$$\mathbf{Cv} = \frac{\text{SCFH}}{1360\sqrt{\frac{(\Delta p)\,(p_1)}{(460 + T)\,(\text{S.G.})}}} \quad \text{or} \quad \mathbf{SCFH} = 1360\,\text{Cv}\sqrt{\frac{(\Delta p)\,(p_1)}{(460 + T)\,(\text{S.G.})}}$$

where:
$\Delta p = p_1 - p_2$
p_1 = inlet pressure in psia
p_2 = outlet pressure in psia
SCFH = flow in standard cubic feet per hour
S.G. = specific gravity of gas where air = 1 @ 70° F (21° C) and 14.7 psia
T = temperature in ° F

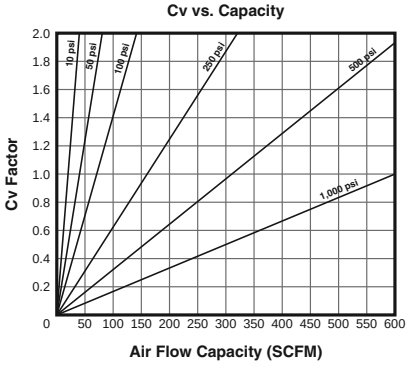

Note: Maximum effective Δp for compressible fluids is ½p_1.

1700 Series

Forged Body, Integral Bonnet Needle Valves

These affordable valves are suited for a wide variety of process control applications. Non-rotating stainless steel or replaceable PCTFE stem tips reduce galling. Dyna-Pak® packing below the stem threads prevents fugitive emissions.

Typical Applications

- Cylinder valves
- Panel board instrumentation
- Pressure gauge valves
- Sampling systems
- Research laboratories
- Oxygen service
- Corrosive or high pressure service

Technical Data

BODY*	316 stainless steel, MONEL®
MAXIMUM OPERATING PRESSURE	6000 psig @ 70° F (414 Bar @ 21° C)
OPERATING TEMPERATURE RANGE	Metal stem tip -65° to +450° F (-54° to +232° C) PCTFE stem tip -20° to +250° F (-29° to +121° C)
ORIFICE	0.187″ (4.8mm)
Cv FACTOR	0.31-0.45

** Consult factory for other materials*

Features & Benefits

Safety

- Lock nut secures packing nut to prohibit accidental removal

Long cycle life

- Packing below stem threads prevents fluid from contacting the stem threads
- Non-rotating hardened 17-4PH stainless steel, MONEL® or replaceable PCTFE stem tip is combined with a hardened 450 stainless steel - or MONEL® thread gland to reduce galling

Helps eliminate fugitive emissions

- Dyna-Pak® packing provides a leak-tight seal with low operating torque

Reliability

- All valves are tested for bubble-tight leakage at both seat and packing

Installation variety

- Broad selection of male NPT, female NPT, and GYROLOK® fractional or metric tube fitting connections

Panel mounting

- Panel mounting is standard on all models
- Special High Tolerance NPT Thread

1700 Series

Materials of Construction

	DESCRIPTION	316 STAINLESS STEEL	MONEL®
1	Body	316 stainless steel	MONEL®
2	Stem	316 stainless steel	MONEL®
3	Stem tip Soft Hard	 PCTFE 17-4PH stainless steel	 PCTFE MONEL®
4	Stem packing	TFE/316 stainless steel wafers	TFE/MONEL® wafers
5	Packing nut	XM-28 stainless steel	XM-28 stainless steel
6	Lock nut	316 stainless steel	316 stainless steel
7	Handle 1711 Series 1751 Series	 Aluminum ABS	 Aluminum ABS
8	Panel mounting nut	316 stainless steel	316 stainless steel

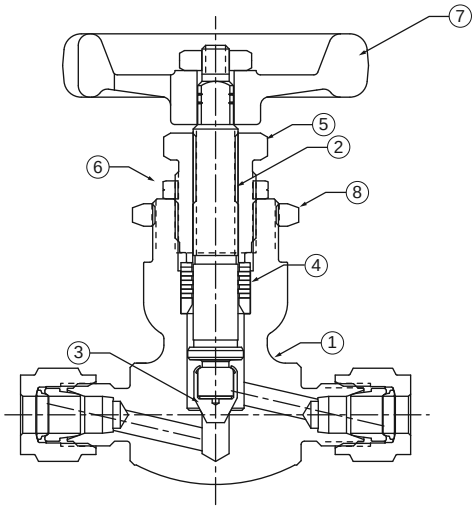

Dimensions

1700 Series: Globe Pattern

INLET A	OUTLET B		D	E	F	H	H[1]
¼″ GYROLOK®	¼″ GYROLOK®	inch	3	2 1/16	2 1/8	1/2	1 1/16
		mm	76	52	54	13	27
¼″ male NPT	¼″ male NPT	inch	3	2 3/16	2 1/8	1/2	1 1/16
		mm	76	56	54	13	27
¼″ male NPT	¼″ female NPT	inch	3	2 1/8	2 1/8	1/2	1 1/16
		mm	76	54	54	13	27
¼″ female NPT	¼″ female NPT	inch	3	2 1/16	2 1/8	1/2	1 1/16
		mm	76	52	54	13	27
⅜″ GYROLOK®	⅜″ GYROLOK®	inch	3	2 1/8	2 1/8	1/2	1 1/16
		mm	76	54	54	13	27
8mm GYROLOK®	8mm GYROLOK®	inch	3	2 11/16	2 1/8	1/2	1 1/16
		mm	76	68	54	13	27

Dimensions for reference only, subject to change.

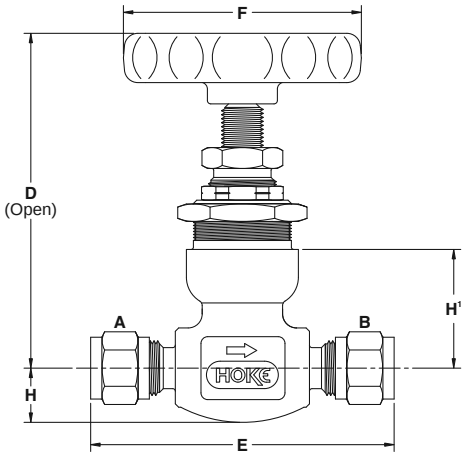

Panel mounting dimensions

Panel hole = 57/64″ (22.6 mm) diameter
Panel thickness = ¼″ (6.4 mm) maximum

Pressure vs. Temperature Curve

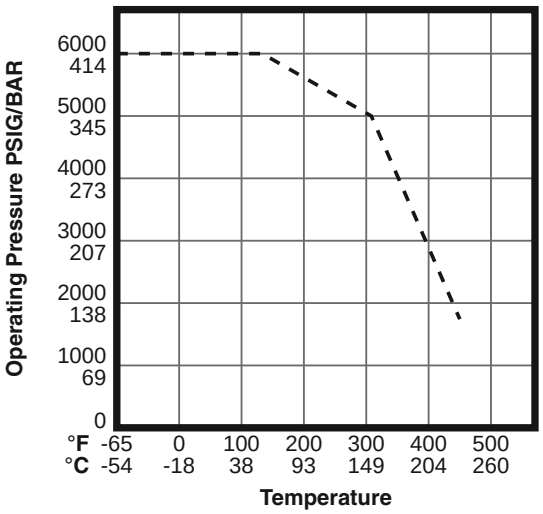

1700 Series

Flow Curves

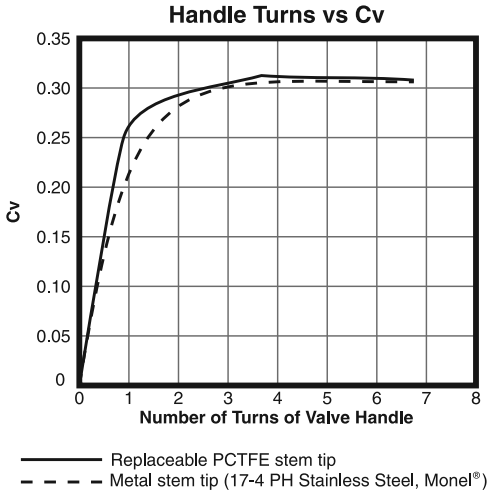

Cv varies with end connection.

Chart shows part numbers with 0.31 Cv only.

Contact factory for 0.45 Cv data.

How to Order: Standard Valves

1711L4Y: Globe pattern

1700 Series: Globe Pattern
Metal stem tip for service to +450° F (+232° C)
0.187″ (4.7mm) orifice/0.31 to 0.45 Cv

END CONNECTIONS		Cv	ORDER BY PART NUMBER	
INLET	OUTLET		316 STAINLESS STEEL	MONEL®
¼″ GYROLOK®	¼″ GYROLOK®	0.31	**1711G4Y**	—
¼″ male NPT	¼″ male NPT	0.45	**1711M4Y**	**1711M4M**
¼″ male NPT	¼″ female NPT	0.45	**1711L4Y**	—
¼″ female NPT	¼″ female NPT	0.45	**1711F4Y**	**1711F4M**
3/8″ GYROLOK®	3/8″ GYROLOK®	0.45	**1711G6Y**	—
8mm GYROLOK®	8mm GYROLOK®	0.45	**1711G8YMM**	—

NOTE: For applications requiring TPED/PED certification, add a CE suffix to part number. Example: 1711 G4Y-CE.

1751G4Y: Globe pattern

1700 Series: Globe Pattern
PCTFE stem tip for service to +250° F (+121° C)
0.187″ (4.7mm) orifice/0.31 to 0.45 Cv

END CONNECTIONS		Cv	ORDER BY PART NUMBER	
INLET	OUTLET		316 STAINLESS STEEL	MONEL®
¼″ GYROLOK®	¼″ GYROLOK®	0.31	**1751G4Y**	—
¼″ male NPT	¼″ male NPT	0.45	**1751M4Y**	**1751M4M**
¼″ male NPT	¼″ female NPT	0.45	**1751L4Y**	—
¼″ female NPT	¼″ female NPT	0.45	**1751F4Y**	**1751F4M**
3/8″ GYROLOK®	3/8″ GYROLOK®	0.45	**1751G6Y**	—
8mm GYROLOK®	8mm GYROLOK®	0.45	**1751G8YMM**	—

Ordering Options

Spare Parts
Spare parts and repair kits are available for all needle valves. Please contact your distributor for specific information.

Cleaning and Testing
When ordering, please specify if oxygen cleaning or helium leak testing is required.

Additional Sizes
Additional sizes and options are available on special request. Please consult your local HOKE® distributor.

2100 Series

Bar Stock, Screwed Bonnet Needle Valves

This panel mountable, two-piece design is available in globe and angle patterns for flexibility of installation. Dyna-Pak® packing provides leak-tight sealing with low operating torque. Optional Graph-Lock® packing is available for high-temperature applications. The safety back-seating prevents accidental removal of the stem.

Typical Applications

- Hydraulic systems
- High temperature service to +600° F (+316° C)
- Gas sampling
- Test stands

Technical Data

BODY*	316 stainless steel, carbon steel, brass
MAXIMUM OPERATING PRESSURE	*Stainless steel* 6000 psig @ 70° F (414 Bar @ 21° C) *Carbon steel* 5000 psig @ 70° F (345 Bar @ 21° C) *Brass* 3000 psig @ 70° F (207 Bar @ 21° C)
OPERATING TEMPERATURE RANGE	*Dyna-Pak®/Metal stem tip* -65° to +450° F (-54° to +232° C) *Dyna-Pak®/PCTFE stem tip* -20° to +250° F (-29° to +121° C) *Graph-Lock®/Metal stem tip* -60° to 600° F (-51° to 316° C)
ORIFICE SIZES	0.188″ (4.8mm), 0.250″ (6.4mm), 0.313″ (8.0mm)
Cv FACTORS	0.40 to 1.20

** Consult factory for other materials*

Features & Benefits

Safety

- Back seating provides added sealing protection
- Lock pin prevents accidental bonnet disengagement

High pressure capability

- 316 stainless steel valve maximum working pressure is 6000 psig (414 Bar)

Extended temperature range

- Choice of Dyna-Pak® packing or high temperature Graph-Lock® packing

Versatile

- Choice of regulating stem tip or metal stem with nonrotating replaceable PCTFE stem tip, with a variety of end connections

Reliability

- All valves are tested for bubble-tight leakage at both seat and packing

Panel mounting

- Panel mounting is standard on all models
- Special High Tolerance NPT Thread

2100 Series

Materials of Construction

	DESCRIPTION	BRASS	316 STAINLESS STEEL	CARBON STEEL
1	Body	Brass	316 stainless steel	Carbon steel
2	Stem	316 stainless steel	316 stainless steel	316 stainless steel
3	*Stem tip* soft hard	PCTFE 316 stainless steel	PCTFE 316 stainless steel	PCTFE 316 stainless steel
4	*Stem packing* Dyna-Pak® packing High temperature packing	TFE/brass wafers —	TFE/316 stainless steel wafers Graph-Lock® TFE wafers	TFE/316 stainless steel wafers Graph-Lock® TFE wafers
5	Bonnet	Brass	316 stainless steel	Carbon steel
6	*Handle* Valve w/Dyna-Pak® packing Valve w/high temperature packing	ABS wheel, black —	ABS wheel, black Aluminum cross, red	ABS wheel, black Aluminum cross, red
7	Packing nut	Brass	316 stainless steel	Carbon steel
8	Panel mounting nut	Nickel-plated brass	Nickel-plated brass	Nickel-plated brass

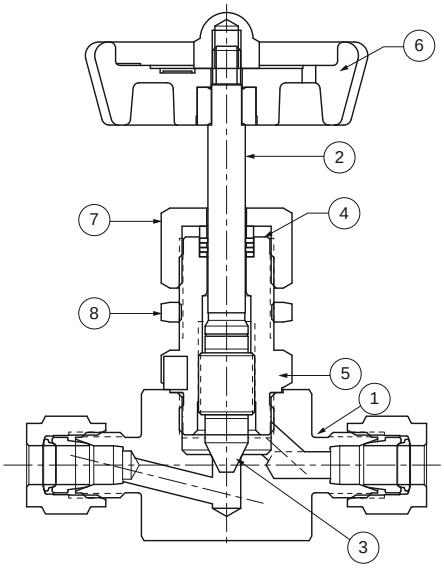

Regulating stem tip shown

Pressure vs. Temperature Curves

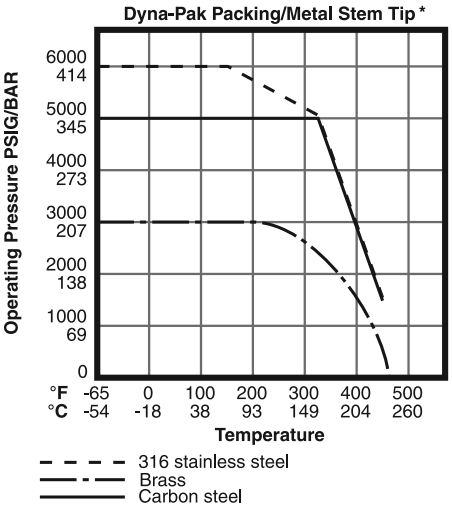

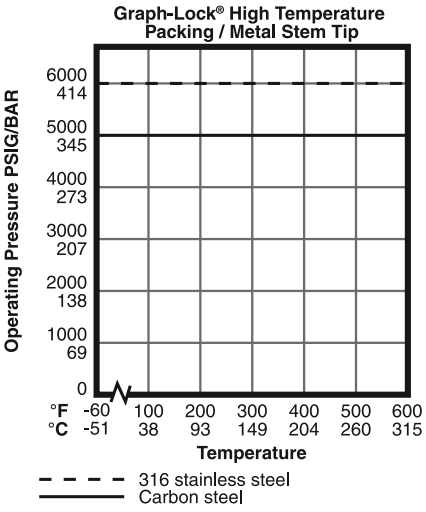

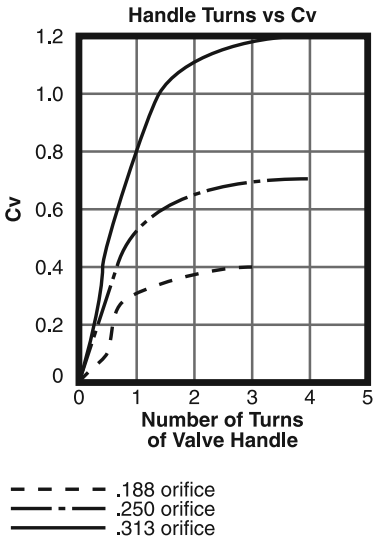

**Curves for PCTFE stem tip are the same as above but limited to -20° to +250°F (-29° to +121 °C)*

2100 Series

Dimensions

2100 Series: Globe Pattern

INLET A	OUTLET B		D	E	F HARD SEAT	F SOFT SEAT	F METAL HANDLE	H	H[1]
¼″ GYROLOK®	¼″ GYROLOK®	inch	3¼	2 11/16	1⅞	—	—	½	25/32
		mm	83	68	48	—	—	13	20
¼″ female NPT	¼″ female NPT	inch	3¼	2	1⅞	1⅜	2⅜	½	¾
		mm	83	51	48	35	60	13	19
⅜″ GYROLOK®	⅜″ GYROLOK®	inch	3 5/16	2 11/16	1⅞	1⅞	—	½	¾
		mm	84	68	48	48	—	13	19
½″ GYROLOK®	½″ GYROLOK®	inch	3⅝	3⅜	1⅞	—	—	⅝	15/16
		mm	84	75	48	—	—	13	19
½″ male NPT	½″ female NPT	inch	3¾	2¾	1⅞	—	—	⅝	31/32
		mm	95	70	48	—	—	16	25
½″ female NPT	½″ female NPT	inch	3¾	2½	2⅜	1⅞	2⅜	⅝	15/16
		mm	95	64	60	48	60	16	24

Dimensions for reference only, subject to change.
** Use metal handle dimensions for high temperature, 2118 Series valves.*

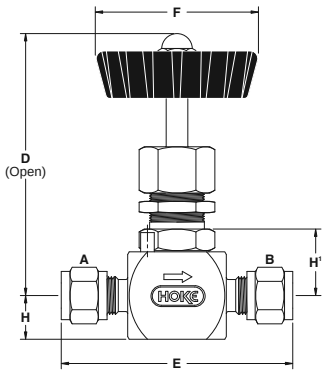

Globe pattern

2100 Series: Angle Pattern

INLET A	OUTLET B		D	E	F HARD SEAT	F SOFT SEAT	H	H[1]
¼″ female NPT	¼″ female NPT	inch	3 5/16	1 7/16	1⅞	1⅜	9/16	1 3/16
		mm	84	37	48	35	14	21
⅜″ female NPT	⅜″ female NPT	inch	3⅜	1½	1⅞	—	⅝	⅞
		mm	86	38	48	—	16	22

Dimensions for reference only, subject to change.

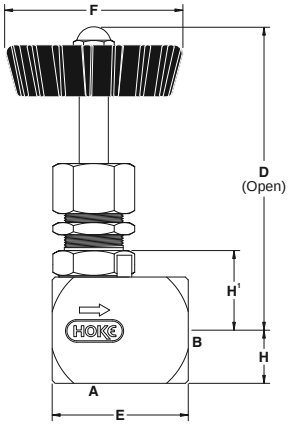

Angle pattern

Panel mounting dimensions

Panel hole for ½″ models = 49/64″ (19.4 mm) diameter
for all other models = 41/64″ (16.2 mm) diameter
Panel thickness = 3/16″ (4.7 mm) maximum

How to Order: Standard Valves

2118G4Y: Globe pattern

2100 Series: Globe Pattern

Metal stem tip; Dyna-Pak® packing for service to +450° F (+232° C)

END CONNECTIONS INLET	END CONNECTIONS OUTLET	ORDER BY PART NUMBER BRASS	ORDER BY PART NUMBER 316 STAINLESS STEEL	ORDER BY PART NUMBER CARBON STEEL	ORIFICE (IN INCHES)	Cv
¼″ GYROLOK®	¼″ GYROLOK®	**2112G4B**	**2112G4Y**	—	0.188	0.40
¼″ female NPT	¼″ female NPT	**2112F4B**	**2112F4Y**	**2112F4E**	0.188	0.40
⅜″ GYROLOK®	⅜″ GYROLOK®	—	**2112G6Y**	—	0.250	0.70
⅜″ female NPT	⅜″ female NPT	**2112F6B**	**2112F6Y**	—	0.250	0.70
½″ GYROLOK®	½″ GYROLOK®	—	**2112G8Y**	—	0.313	1.20
½″ male NPT	½″ female NPT	—	**2112L8Y**	—	0.313	1.20
½″ female NPT	½″ female NPT	**2112F8B**	**2112F8Y**	**2112F8E**	0.313	1.20

2100 Series: Globe Pattern

Metal stem tip; Graph-Lock® high temperature packing for service to +600° F (+316° C)

END CONNECTIONS INLET	END CONNECTIONS OUTLET	ORDER BY PART NUMBER 316 STAINLESS STEEL	ORDER BY PART NUMBER CARBON STEEL	ORIFICE (IN INCHES)	Cv
¼″ GYROLOK®	¼″ GYROLOK®	**2118G4Y**	—	0.188	0.40
¼″ female NPT	¼″ female NPT	**2118F4Y**	**2118F4E**	0.188	0.40
⅜″ female NPT	⅜″ female NPT	**2118F6Y**	—	0.250	0.70
½″ female NPT	½″ female NPT	**2118F8Y**	**2118F8E**	0.313	1.20

2100 Series

2122F4Y: Angle pattern

2100 Series: Globe Pattern

PCTFE stem tip; Dyna-Pak® packing for service to +250° F (+121° C)

END CONNECTIONS		ORDER BY PART NUMBER		ORIFICE	
INLET	OUTLET	BRASS	316 STAINLESS STEEL	(IN INCHES)	Cv
¼″ female NPT	¼″ female NPT	—	**2152F4Y**	0.188	0.40
½″ female NPT	½″ female NPT	**2152F8B**	**2152F8Y**	0.313	1.20

2100 Series: Angle Pattern

Metal stem tip; Dyna-Pak® packing for service to +450° F (+232° C)

END CONNECTIONS		ORDER BY PART NUMBER		ORIFICE	
INLET	OUTLET	BRASS	316 STAINLESS STEEL	(IN INCHES)	Cv
¼″ female NPT	¼″ female NPT	—	**2122F4Y**	0.188	0.40
⅜″ female NPT	⅜″ female NPT	**2122F6B**	—	0.250	0.70

Ordering Options

Spare Parts

Spare parts and repair kits are available for all needle valves. Please contact your distributor for specific information.

Cleaning and Testing

When ordering, please specify if oxygen cleaning or helium leak testing is required.

Additional Sizes

Additional sizes and options are available upon special request. Please consult your local HOKE® distributor.

2200 Series

Bar Stock, Screwed Bonnet Needle Valves

Dyna-Pak® packing below the stem threads, a hardened thread gland and a HASTELLOY® C-276 stem tip keep valves leak-tight while providing long cycle life. A choice of two flow capabilities enables use in a variety of severe service applications.

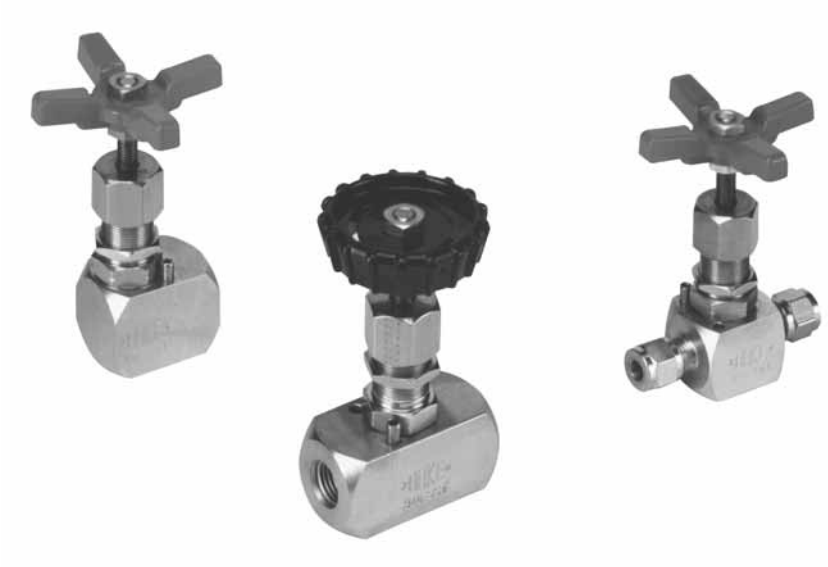

Typical Applications

- Corrosive handling
- Sampling systems
- Metering service

Technical Data

BODY*	316 stainless steel
MAXIMUM OPERATING PRESSURE	5000 psig @ 70° F (345 Bar @ 21° C)
OPERATING TEMPERATURE RANGE	-65° to +450° F (-54° to +232° C)
ORIFICE SIZES	0.086″ to 0.313″ (2.2 mm to 8.0 mm)
Cv FACTORS	0.12 to 1.40

** Consult factory for other materials*

Features & Benefits

Safety
- Lock pin prevents accidental bonnet disengagement

Durability
- HASTELLOY® C-276 stem tip provides long service life

Extended temperature range
- Dyna-Pak® packing

Reliability
- All valves are tested for bubble-tight leakage at both seat and packing

Extended cycle life
- Dyna-Pak® packing below stem threads prevents washing away of thread lubricant and contamination of process fluid

Installation variety
- Choose from a broad selection of male NPT, female NPT and GYROLOK® tube fitting connections in globe or angle patterns

Panel mounting
- Panel mounting is standard on all models
- Special High Tolerance NPT Thread

2200 Series

Materials of Construction

	DESCRIPTION	MATERIAL
1	Body	316 stainless steel
2	Stem	316 stainless steel
3	Stem tip	HASTELLOY® C-276
4	Stem packing	TFE/316 stainless steel wafers
5	Bonnet	316 stainless steel
6	Thread gland	416 stainless steel
7	*Handle* 2210, 2220 Series 2230 Series	 Aluminum cross, red ABS
8	Panel mounting nut	Nickel-plated brass

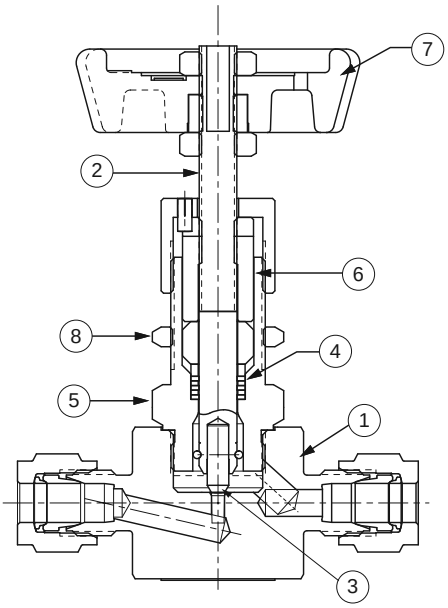

Dimensions

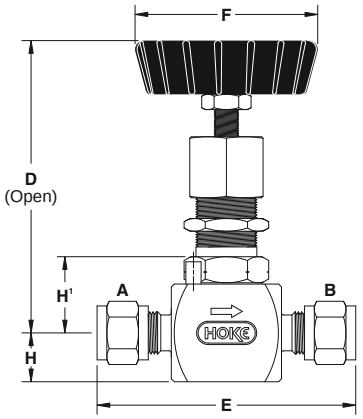

Globe pattern

2200 Series: Globe Pattern

INLET A	OUTLET B		D	E	F	H	H'
¼″ GYROLOK®	¼″ GYROLOK®	inch	3 5/16	2 21/32	2 3/8	½	25/32
		mm	84	67	60	13	20
¼″ female NPT	¼″ female NPT	inch	3 5/16	2	2 3/8	½	13/16
		mm	84	51	60	13	21
⅜″ GYROLOK®	⅜″ GYROLOK®	inch	3¼	2 11/16	2 3/8	½	¾
		mm	83	68	60	13	19
⅜″ female NPT	⅜″ female NPT	inch	3 5/16	2	2 3/8	½	13/16
		mm	84	51	60	13	21
½″ GYROLOK®	½″ GYROLOK®	inch	3¼	2 15/16	2 3/8	½	25/32
		mm	83	75	60	13	20
½″ male NPT	¼″ female NPT	inch	3 5/16	2⅛	2 3/8	½	13/16
		mm	84	54	60	13	21
½″ female NPT	½″ female NPT	inch	3 11/16	2½	2 3/8	⅝	⅞
		mm	94	64	60	16	22
10mm GYROLOK®	10mm GYROLOK®	inch	3 5/16	2 11/16	2 3/8	½	25/32
		mm	84	68	60	13	20
12mm GYROLOK®	12mm GYROLOK®	inch	3 5/16	2 15/16	2 3/8	½	¾
		mm	84	75	60	13	19

Dimensions for reference only, subject to change.

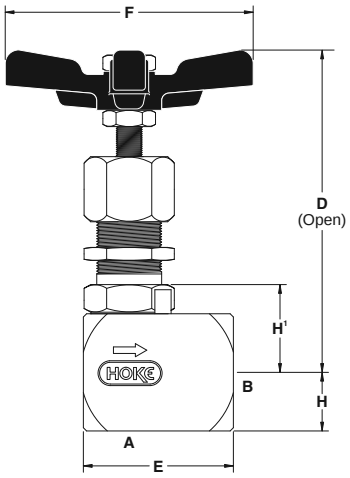

Angle pattern

2200 Series: Angle Pattern

INLET A	OUTLET B		D	E	F	H	H'
¼″ female NPT	¼″ female NPT	inch	3 9/16	1 7/16	2 3/8	9/16	⅞
		mm	90	37	60	14	22

Dimensions for reference only, subject to change.

Panel mounting dimensions

Panel hole: for ½″ models = 49/64″ (19.4 mm) diameter
for all other models = 41/64″ (16.2 mm) diameter

Panel thickness = 3/16″ (4.7 mm) maximum

2200 Series

Pressure vs. Temperature Curve

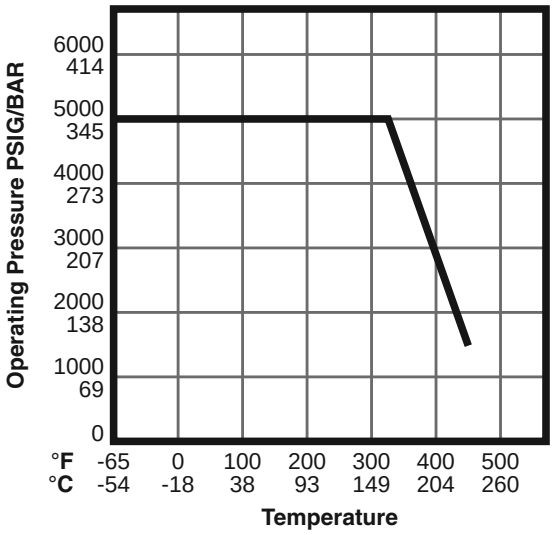

Flow Curves

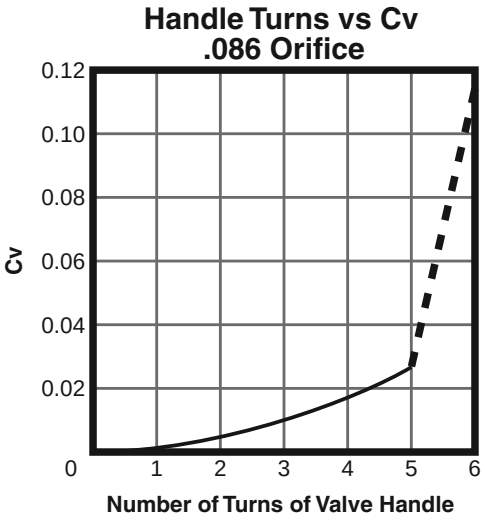

Note: Metering range of valve is within the first 5 handle turns.

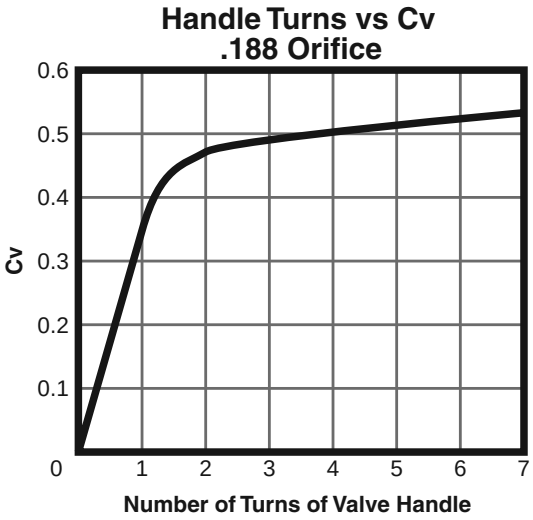

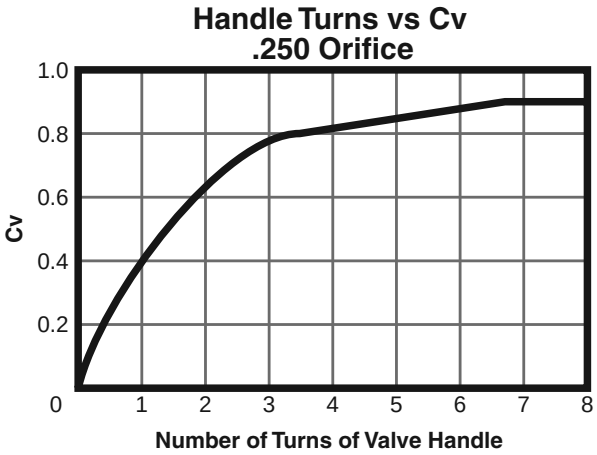

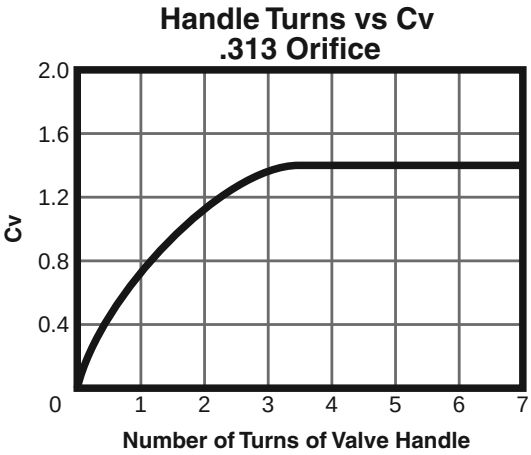

2200 Series

How to Order: Standard Valves

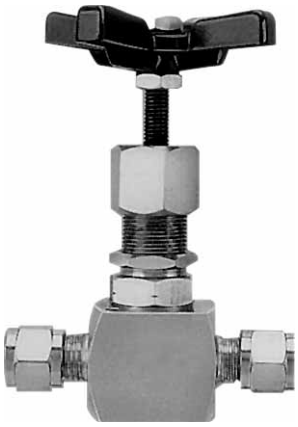

2215G6Y: Globe pattern

Regulating stem tip (for greater control of flow)

2225F4Y: Angle pattern

Blunt vee-point tip (full flow with only a few handle turns)

2200 Series: Globe Pattern
Blunt vee-point stem tip

END CONNECTIONS		ORDER BY PART NUMBER		
INLET	OUTLET	316 STAINLESS STEEL	ORIFICE (INCHES)	Cv
¼″ GYROLOK®	¼″ GYROLOK®	**2215G4Y**	0.188	0.40
¼″ female NPT	¼″ female NPT	**2215F4Y**	0.188	0.50
⅜″ GYROLOK®	⅜″ GYROLOK®	**2215G6Y**	0.250	0.76
⅜″ female NPT	⅜″ female NPT	**2215F6Y**	0.250	0.90
½″ GYROLOK®	½″ GYROLOK®	**2215G8Y**	0.250	0.90
½″ male NPT	¼″ female NPT	**2215L84Y**	0.188	0.50
½″ female NPT	½″ female NPT	**2215F8Y**	0.313	1.40
10mm GYROLOK®	10mm GYROLOK®	**2215G10YMM**	0.250	0.90
12mm GYROLOK®	12mm GYROLOK®	**2215G12YMM**	0.250	0.90

2200 Series: Globe Pattern
Regulating stem tip

END CONNECTIONS		ORDER BY PART NUMBER		
INLET	OUTLET	316 STAINLESS STEEL	ORIFICE (INCHES)	Cv
¼″ female NPT	¼″ female NPT	**2232F4Y**	0.086	0.12

2200 Series: Angle Pattern
Blunt vee-point stem tip

END CONNECTIONS		ORDER BY PART NUMBER		
INLET	OUTLET	316 STAINLESS STEEL	ORIFICE (INCHES)	Cv
¼″ female NPT	¼″ female NPT	**2225F4Y**	0.188	0.55

Ordering Options

Spare Parts
Spare parts and repair kits are available for all needle valves. Please contact your distributor for specific information.

Cleaning and Testing
When ordering, please specify if oxygen cleaning or helium leak testing is required.

Additional Sizes
Additional sizes and options are available on special request. Please consult your local HOKE® distributor.

2219 Series

Severe Service Needle Valves

The HOKE® 2219 Needle Valve is an excellent choice for many steam- and severe service applications. Grafoil® packing below the stem threads provides exceptional service at temperatures up to +1000° F (+538° C). The non-rotating 316 stainless steel stem tip prevents galling.

Typical Applications

- Steam service in power plants
- Hot condensates

Technical Data

BODY MATERIAL	316 stainless steel, carbon steel, HASTELLOY® C-276, and MONEL®
MAXIMUM OPERATING PRESSURE	6000 psig @ 70° F (414 Bar @ 21° C)
PROOF PRESSURE SAFETY FACTOR	2:1
BURST PRESSURE	4:1
TEMPERATURE RANGE	-100° F to + 1000° F @ 1750 psig max. (-75° C to + 538° C @ 120 bar max.)
ORIFICE SIZES	0.170″, 0.250″, 0.312″, and 0.437″ (4.3 mm, 6.4 mm, 7.9 mm, and 11.1 mm)
C_V FACTORS*	0.47, 1.09, and 1.20

** C_V factor for 0.437" orifice not available at time of publication*

Features & Benefits

- Meets ANSI 900# specifications
- Grafoil® packing below threads isolates threads from media.
- Non-rotating 316 stainless steel stem tip prevents galling
- High pressure / high temperature use
- All standard components are 316 stainless steel
- Standard 316 stainless steel cast handle
- Fractional end connections available up to 1″; metric end connections up to 25 mm
- GYROLOK®, female NPT, NPS-, or tube socket weld end connections
- Bubble-tight leak testing at both seat and packing
- Special High Tolerance NPT Thread

2219 Series Severe Service Needle Valve

Dimensions

INLET A	OUTLET B	ORIFICE SIZE		C	D	E	F
¼″ female NPT	¼″ female NPT	0.250″ (6.4 mm)	inch	3.4	2.63	2.25	N/A
			mm	86.4	66.8	57.2	N/A
½″ female NPT	½″ female NPT	0.312″ (7.9 mm)	inch	3.4	2.63	2.51	N/A
			mm	86.4	66.8	63.8	N/A
¾″ female NPT	¾″ female NPT	0.437″ (11.1 mm)	inch	3.55	2.63	3.50	N/A
			mm	89.6	66.8	88.9	N/A
1″ female NPT	1″ female NPT	0.437″ (11.1 mm)	inch	3.59	2.63	4.25	N/A
			mm	91.3	66.8	108.0	N/A
¼″ GYROLOK®	¼″ GYROLOK®	0.170″ (4.3 mm)	inch	3.4	2.63	1.87	3.15
			mm	86.4	66.8	47.4	80.1
½″ GYROLOK®	½″ GYROLOK®	0.250″ (6.4 mm)	inch	3.4	2.63	1.50	3.43
			mm	86.4	66.8	38.1	87.1
¾″ GYROLOK®	¾″ GYROLOK®	0.437″ (11.1 mm)	inch	3.53	2.63	2.88	4.87
			mm	89.7	66.8	73.2	123.8
1″ GYROLOK®	1″ GYROLOK®	0.437″ (11.1 mm)	inch	3.53	2.63	2.51	5.00
			mm	89.7	66.8	63.8	120.9
12 mm GYROLOK®	12 mm GYROLOK®	0.250″ (6.4 mm)	inch	3.40	2.63	1.51	3.36
			mm	86.4	66.8	38.5	85.4
22 mm GYROLOK®	22 mm GYROLOK®	0.437″ (11.1 mm)	inch	3.53	2.63	2.76	4.86
			mm	89.7	66.8	70.1	123.3
25 mm GYROLOK®	25 mm GYROLOK®	0.437″ (11.1 mm)	inch	3.53	2.63	2.51	5.11
			mm	89.7	66.8	63.8	129.7
⅜″ tube socket weld	⅜″ tube socket weld	0.250″ (6.4 mm)	inch	3.4	2.63	1.94	2.44
			mm	86.4	66.8	49.3	62.0
½″ tube socket weld	½″ tube socket weld	0.250″ (6.4 mm)	inch	3.40	2.63	1.94	2.44
			mm	86.4	66.8	49.3	62.0
¾″ tube socket weld	¾″ tube socket weld	0.437″ (11.1 mm)	inch	3.53	2.63	2.50	3.50
			mm	89.7	66.8	63.5	88.9
1″ tube socket weld	1″ tube socket weld	0.437″ (11.1 mm)	inch	3.53	2.63	2.50	3.50
			mm	89.7	66.8	63.5	88.9
⅜″ NPS socket weld	⅜″ NPS socket weld	0.250″ (6.4 mm)	inch	3.4	2.63	2.01	2.51
			mm	56.4	66.8	51.05	63.8
½″ NPS socket weld	½″ NPS socket weld	0.312″ (7.9 mm)	inch	3.4	2.63	1.75	2.51
			mm	86.4	66.8	44.45	63.8
¾″ NPS socket weld	¾″ NPS socket weld	0.437″ (11.1 mm)	inch	3.53	2.63	2.50	3.50
			mm	89.7	66.8	63.5	88.9
1″ NPS socket weld	1″ NPS socket weld	0.437″ (11.1 mm)	inch	3.59	2.63	2.50	3.50
			mm	91.3	66.8	63.5	88.9

Dimensions for reference only, subject to change.

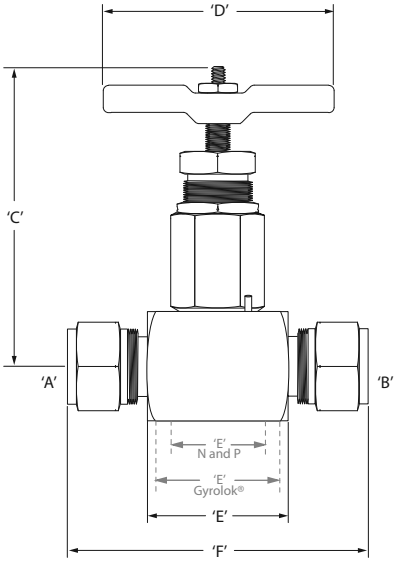

Materials of Construction*

	DESCRIPTION	MATERIAL
1	Handle	316 stainless steel
2	Stem assembly	316 stainless steel
3	Packing nut	316 stainless steel
4	Body	316 stainless steel
5	Packing	Grafoil®
6	Packing washer	316 stainless steel

** This listing contains standard valve information only. See page 19 for a complete list of options.*

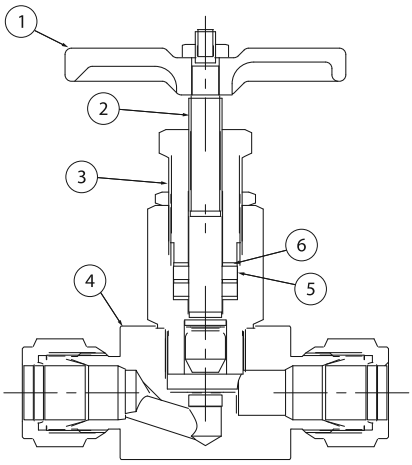

Pressure vs. Temperature Curve

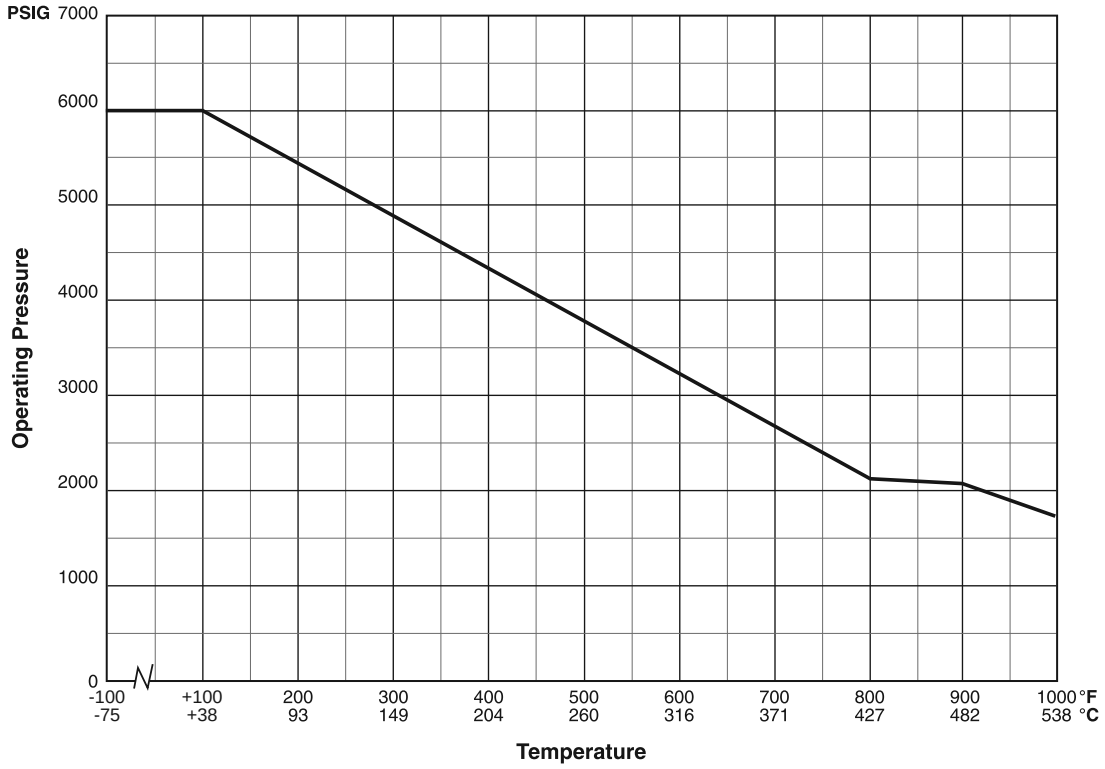

Flow Curves

Handle Turns vs. C_V

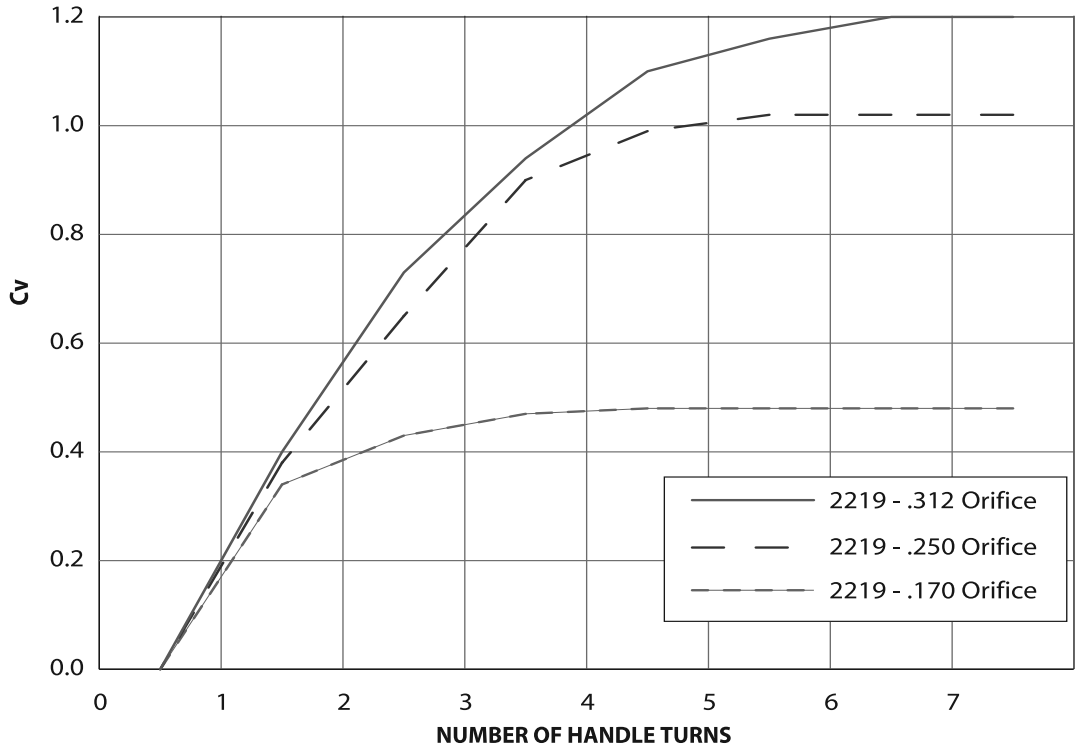

** Data for 0.437" orifice not available at time of publication*

2219 Series Severe Service Needle Valve

How to Order: Build-to-Order

2219 F8 Y MM

VALVE SERIES

METRIC

MM Specify for GYROLOK® metric only*
(fractional sizes leave blank)

BASIC MATERIAL

E Carbon steel
HC HASTELLOY® C-276
M MONEL®
Y 316 stainless steel (standard)

CONNECTION TYPE & SIZE

F4 ¼″ Female NPT inlet/outlet
F6 ⅜″ Female NPT inlet/outlet
F8 ½″ Female NPT inlet/outlet
F12 ¾″ Female NPT inlet/outlet
F16 1″ /Female NPT inlet/outlet
G4 ¼″ GYROLOK® inlet/outlet
G6 ⅜″ GYROLOK® inlet/outlet
G8 ½″ GYROLOK® inlet/outlet
G12 ¾″ GYROLOK® inlet/outlet
G12 12 mm GYROLOK® inlet/outlet
G16 1” GYROLOK® inlet/outlet
G22 22 mm GYROLOK® inlet/outlet
G25 25 mm GYROLOK® inlet/outlet
N6 ⅜″ Tube socket weld inlet/outlet
N8 ½″ Tube socket weld inlet/outlet
N12 ¾″ Tube socket weld inlet/outlet
N16 1” Tube socket weld inlet/outlet
P6 ⅜″ NPS pipe socket weld inlet/outlet
P8 ½″ NPS pipe socket weld inlet/outlet
P12 ¾″ NPS pipe socket weld inlet/outlet
P16 1” NPS pipe socket weld inlet/outlet

** Consult factory for metric connections and additional material options.*

www.HOKE.com
www.unioncarbide.com
www.haynesintl.com
www.specialmetals.com

3700, 3800, 3900 Series

Forged Body, Integral Bonnet Needle Valves

Offered in four different body materials, this group of valves can handle a wide range of general purpose liquid and gas applications. Six types of stem tips are available, including two styles of vee-points.

Typical Applications

- Instrument air lines
- Sampling
- Gas chromatography
- Test stands
- Cylinder valves

Technical Data

BODY*	*316 stainless steel, MONEL®, carbon steel, brass*
MAXIMUM OPERATING PRESSURE	*316 stainless steel, MONEL®, carbon steel* 5000 psig @ 70° F (345 Bar @ 21° C) *Brass* 3000 psig @ 70° F (207 Bar @ 21° C)
OPERATING TEMPERATURE RANGE	*Metal stem tip* -65° to +450° F (-54° to +232° C) *PCTFE stem tip* -20° to +250° F (-29° to +121° C)
ORIFICE SIZES	0.060″ to 0.312″ (1.5 mm to 7.9 mm)
Cv FACTORS	0.07 to 1.10

** Consult factory for other materials*

Features & Benefits

Safety

- Integral bonnet provides differential thread pitch between stem threads and packing nut thread preventing accidental stem removal

Stem tip options

- A choice of PCTFE, metal, vee-point, blunt vee-point, or regulating stem tips

Helps eliminate fugitive emissions

- Dyna-Pak® packing provides a leak-tight seal with low operating torque in deep vacuum or high pressure applications

Dependability

- All valves are tested for bubble-tight leakage at both seat and packing

Installation variety

- Broad selection of male NPT, female NPT, and GYROLOK® fractional or metric tube fitting connections

Handle options

- Color-coded handles are available for identifying system fluids

Panel mounting available

- All models can be ordered for panel mounting

Easy maintenance

- All models can be panel mounted without packing disruption. Packing can be adjusted without removal from panel
- Special High Tolerance NPT Thread

3700, 3800, 3900 Series

Materials of Construction

	DESCRIPTION	BRASS	316 STAINLESS STEEL	CARBON STEEL	MONEL®
1	Body	Brass	316 stainless steel	Carbon steel	MONEL®
2	Stem	316 stainless steel	316 stainless steel	316 stainless steel	MONEL®
3	Stem tip soft Stem tip hard	PCTFE 316 stainless steel	PCTFE 316 stainless steel	PCTFE 316 stainless steel	PCTFE MONEL®
4	Stem packing	TFE/brass wafers	TFE/316 stainless steel wafers	TFE/316 stainless steel wafers	TFE/MONEL® wafers
5	Handle	ABS	ABS	ABS/aluminum	ABS
6	Panel mounting nut	Nickel-plated brass	Nickel-plated brass	Nickel-plated brass	Nickel-plated brass

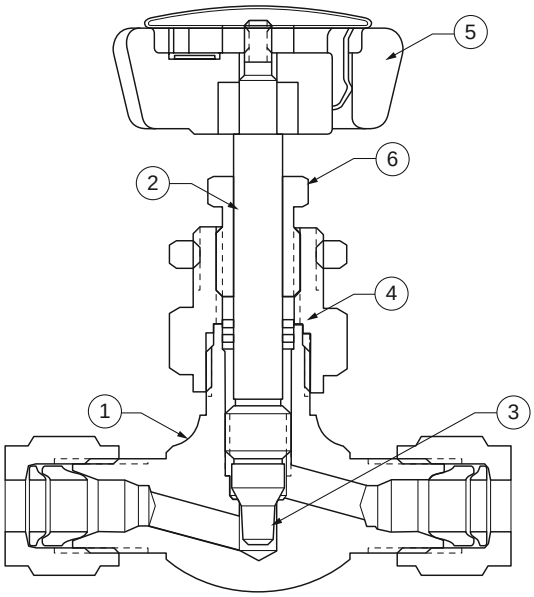

Shown with regulating stem tip

Pressure vs. Temperature Curves

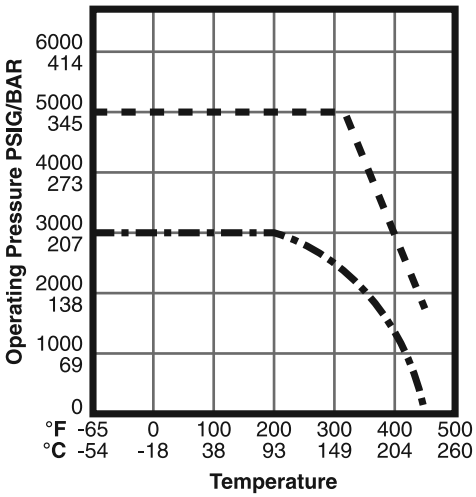

316 stainless steel, carbon steel, Monel®
Brass

Flow Curves

3700 Series
Handle Turns vs Cv*

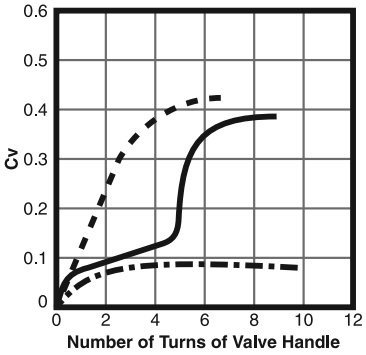

PCTFE stem tip
Regulating stem tip
Vee-point tip

** No data currently available for blunt vee-point stem tip*

3800 Series
Handle Turns vs Cv

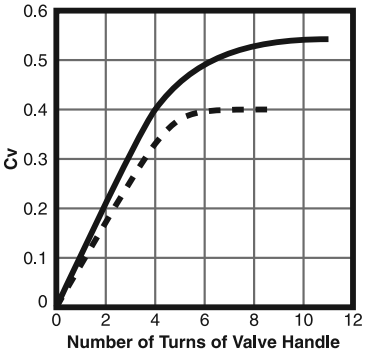

PCTFE stem tip
Regulating stem tip

3900 Series
Handle Turns vs Cv

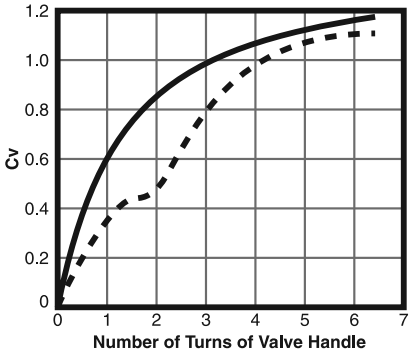

PCTFE stem tip
Regulating stem tip

3700, 3800, 3900 Series

Dimensions

3700 Series: Globe Pattern

Vee-point stem tip

INLET A	OUTLET B		D	E	F	H
⅛″ male NPT	⅛″ male NPT	inch	2 3/16	1¾	1 7/16	25/64
		mm	56	44	37	10
¼″ GYROLOK®	¼″ GYROLOK®	inch	2 3/16	2⅜	1 7/16	25/64
		mm	56	60	37	10
¼″ male NPT	¼″ male NPT	inch	2 3/16	1¾	1 7/16	25/64
		mm	56	44	37	10

Dimensions for reference only, subject to change.

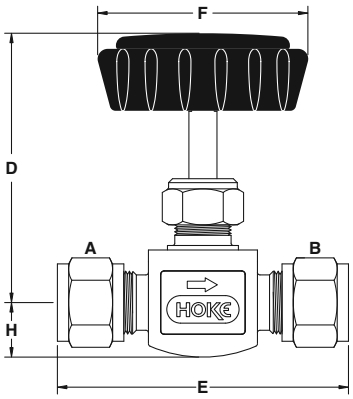

3700/3800 Series globe pattern

3700 Series: Globe Pattern

Regulating and PCTFE stem tips

INLET A	OUTLET B		D	D[1],*	E	F	H	H[1],*
⅛″ GYROLOK®	⅛″ GYROLOK®	inch	2 7/32	2¾	2⅛	1 7/16	19/64	1 1/32
		mm	56	70	54	37	8	26
⅛″ male NPT	⅛″ male NPT	inch	2⅛	2 21/32	1¾	1 7/16	25/64	15/16
		mm	54	67	44	37	10	24
⅛″ male NPT	⅛″ female NPT	inch	2⅛	2 21/32	1¾	1 7/16	25/64	15/16
		mm	54	67	44	37	10	24
⅛″ female NPT	⅛″ female NPT	inch	2⅛	2 21/32	1¾	1 7/16	25/64	15/16
		mm	54	67	44	37	10	24
¼″ GYROLOK®	¼″ GYROLOK®	inch	2⅛	2 21/32	2⅜	1 7/16	25/64	15/16
		mm	54	67	60	37	10	24
¼″ male NPT	¼″ GYROLOK®	inch	2⅛	2 21/32	2 3/16	1 7/16	25/64	15/16
		mm	54	67	56	37	10	24
¼″ male NPT	¼″ male NPT	inch	2⅛	2 21/32	2	1 7/16	25/64	15/16
		mm	54	67	51	37	10	24
3mm GYROLOK®	3mm GYROLOK®	inch	2 3/16	2¾	2⅛	1 7/16	19/64	1 1/32
		mm	56	70	54	37	8	26
6mm GYROLOK®	6mm GYROLOK®	inch	2⅛	2 21/32	2⅜	1 7/16	25/64	15/16
		mm	54	67	60	37	10	24
8mm GYROLOK®	8mm GYROLOK®	inch	2⅛	2 21/32	2⅜	1 7/16	25/64	15/16
		mm	54	67	60	37	10	24

Dimensions for reference only, subject to change.
** D^1 and H^1 for valves with panel mounting.*

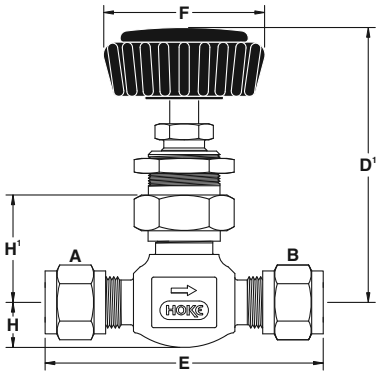

3700/3800 Series globe pattern with D Style panel mounting

3700 Series: Angle Pattern

Regulating and PCTFE Stems

INLET A	OUTLET B		D	D[1],*	E	F	H	H[1],*
⅛″ GYROLOK®	⅛″ GYROLOK®	inch	2 7/32	2¾	1½	1 7/16	1 1/64	1 1/64
		mm	56	70	38	37	26	26
⅛″ male NPT	⅛″ male NPT	inch	2⅛	2 21/32	1 17/64	1 7/16	⅞	15/16
		mm	54	67	32	37	22	24
⅛″ female NPT	⅛″ female NPT	inch	2⅛	2 21/32	1 17/64	1 7/16	⅞	15/16
		mm	54	67	32	37	22	24
⅛″ male NPT	¼″ GYROLOK®	inch	2⅛	2 21/32	1 19/32	1 7/16	⅞	15/16
		mm	54	67	40	37	22	24
¼″ GYROLOK®	¼″ GYROLOK®	inch	2⅛	2 21/32	1 19/32	1 7/16	1 3/16	15/16
		mm	54	67	40	37	30	24
¼″ male NPT	¼″ GYROLOK®	inch	2⅛	2 21/32	1 19/32	1 7/16	⅞	15/16
		mm	54	67	40	37	22	24
¼″ male NPT	¼″ male NPT	inch	2⅛	2 21/32	1 17/64	1 7/16	⅞	15/16
		mm	54	67	32	37	22	24
6mm GYROLOK®	6mm GYROLOK®	inch	2⅛	2 21/32	1 37/64	1 7/16	1 3/16	15/16
		mm	54	67	40	37	30	24

Dimensions for reference only, subject to change.
** D^1 and H^1 for valves with panel mounting.*

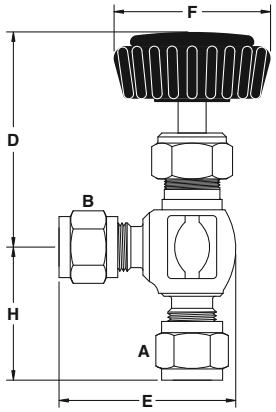

3700/3800 Series angle pattern

3700, 3800, 3900 Series

Dimensions

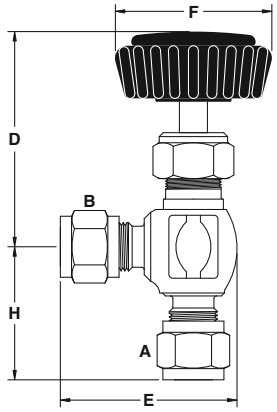

3700/3800 Series angle pattern

3800 Series: Globe Pattern

Regulating and PCTFE stem tips

INLET A	OUTLET B		D	D[1],*	E	F METAL STEM	F PCTFE STEM	H	H[1],*
¼″ male NPT	¼″ female NPT	inch	2 25/32	2 25/32	1 7/8	1 7/8	1 7/16	31/64	1 1/64
		mm	71	71	48	48	37	12	26
¼″ female NPT	¼″ female NPT	inch	2 25/32	2 25/32	1 7/8	1 7/8	1 7/16	31/64	1 1/64
		mm	71	71	48	48	37	12	26
¼″ male NPT	⅜″ GYROLOK®	inch	2 25/32	2 25/32	2 7/32	1 7/8	—	31/64	1 1/64
		mm	71	71	56	48	—	12	26
⅜″ GYROLOK®	⅜″ GYROLOK®	inch	2 25/32	2 25/32	2 9/16	1 7/8	1 7/16	31/64	1 1/64
		mm	71	71	65	48	37	12	26
⅜″ male NPT	⅜″ male NPT	inch	2 25/32	2 25/32	1 7/8	1 7/8	1 7/16	31/64	1 1/64
		mm	71	71	48	48	37	12	26
½″ GYROLOK®	½″ GYROLOK®	inch	2 25/32	2 25/32	2 13/16	1 7/8	1 7/16	31/64	1 1/64
		mm	71	71	71	48	37	12	26
10mm GYROLOK®	10mm GYROLOK®	inch	2 25/32	2 25/32	2 9/16	1 7/8	1 7/16	31/64	1 1/64
		mm	71	71	65	48	37	12	26
12mm GYROLOK®	12mm GYROLOK®	inch	2 25/32	2 25/32	2 13/16	1 7/8	1 7/16	31/64	1 1/64
		mm	71	71	71	48	37	12	26

Dimensions for reference only, subject to change.
** D[1] and H[1] for valves with panel mounting.*

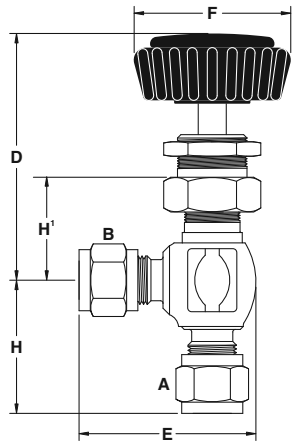

3700/3800 Series angle pattern with P-style panel mounting

3800 Series: Angle Pattern

Regulating and PCTFE stem tips

INLET A	OUTLET B		D	D[1],*	E	F	H	H[1],*
¼″ male NPT	¼″ female NPT	inch	2 11/16	2 11/16	1 27/64	1 7/16	31/32	1
		mm	68	68	36	36	25	25
¼″ female NPT	¼″ female NPT	inch	2 11/16	2 11/16	1 27/64	1 7/16	31/32	1
		mm	68	68	36	36	25	25
⅜″ male NPT	¼″ female NPT	inch	2 11/16	2 11/16	1 27/64	1 7/16	31/32	1
		mm	68	68	36	36	25	25

Dimensions for reference only, subject to change.
** D[1] and H[1] for valves with panel mounting.*

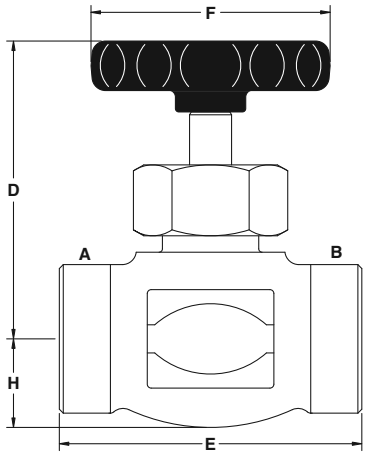

3900 Series globe pattern

3900 Series: Globe Pattern

Regulating and PCTFE stem tips

INLET A	OUTLET B		D	E	F METAL STEM	F PCTFE STEM	H	H[1],*
½″ GYROLOK®	½″ GYROLOK®	inch	3 7/32	3 21/32	2 1/8	1 7/8	25/32	1 19/32
		mm	81	93	54	48	20	40
½″ female NPT	½″ female NPT	inch	3 7/32	2 11/16	2 1/8	1 7/8	25/32	1 19/32
		mm	81	68	54	48	20	40

Dimensions for reference only, subject to change.
** D[1] and H[1] for valves with panel mounting.*

3700, 3800, 3900 Series

How to Order: Standard Valves

3700 Series: Globe Pattern
Vee-point stem
0.060″ (1.5mm) orifice/0.07 Cv-0.35 Cv

END CONNECTIONS		Cv	ORDER BY PART NUMBER	
INLET	OUTLET		BRASS	316 STAINLESS STEEL
⅛″ male NPT	⅛″ male NPT	0.35	**3732M2B**	—
¼″ GYROLOK®	¼″ GYROLOK®	0.07	—	**3732G4Y**
¼″ male NPT	¼″ male NPT	0.35	**3732M4B**	**3732M4Y**

3700 Series: Globe Pattern
Blunt vee-point stem
0.170″ (4.3mm) orifice/0.35 Cv

END CONNECTIONS		Cv	ORDER BY PART NUMBER	
INLET	OUTLET		BRASS	316 STAINLESS STEEL
⅛″ male NPT	⅛″ male NPT	0.35	**3742M2B**	**3742M2Y**
⅛″ female NPT	⅛″ female NPT	0.35	**3742F2B**	**3742F2Y**
¼″ GYROLOK®	¼″ GYROLOK®	0.35	**3742G4B**	**3742G4Y**
¼″ male NPT	¼″ male NPT	0.35	**3742M4B**	**3742M4Y**

3712G4B: Globe pattern

3700 Series: Globe Pattern
Regulating stem tip
0.170″ (4.3mm) orifice/0.35 Cv

END CONNECTIONS		Cv	ORDER BY PART NUMBER		
INLET	OUTLET		BRASS	316 STAINLESS STEEL	MONEL®
⅛″ GYROLOK®	⅛″ GYROLOK®	0.35	**3712G2B**	**3712G2Y**	—
⅛″ male NPT	⅛″ male NPT	0.35	**3712M2B**	**3712M2Y**	—
⅛″ female NPT	⅛″ female NPT	0.35	**3712F2B**	**3712F2Y**	—
¼″ GYROLOK®	¼″ GYROLOK®	0.35	**3712G4B**	**3712G4Y**	**3712G4M**
¼″ male NPT	¼″ GYROLOK®	0.35	**3712H4B**	**3712H4Y**	**3712H4M**
¼″ male NPT	¼″ male NPT	0.35	**3712M4B**	**3712M4Y**	—
3mm GYROLOK®	3mm GYROLOK®	0.35	—	**3712G3YMM**	—
6mm GYROLOK®	6mm GYROLOK®	0.35	—	**3712G6YMM**	—
8mm GYROLOK®	8mm GYROLOK®	0.35	—	**3712G8YMM**	—

3700 Series: Globe Pattern
PCTFE stem tip
0.170″ (4.3mm) orifice/0.35 Cv

END CONNECTIONS		Cv	ORDER BY PART NUMBER		
INLET	OUTLET		BRASS	316 STAINLESS STEEL	MONEL®
⅛″ GYROLOK®	⅛″ GYROLOK®	0.35	—	**3752G2Y**	—
⅛″ female NPT	⅛″ female NPT	0.35	**3752F2B**	**3752F2Y**	—
¼″ GYROLOK®	¼″ GYROLOK®	0.35	**3752G4B**	**3752G4Y**	**3752G4M**
¼″ male NPT	¼″ GYROLOK®	0.35	**3752H4B**	**3752H4Y**	—
¼″ male NPT	¼″ male NPT	0.35	**3752M4B**	**3752M4Y**	—
3mm GYROLOK®	3mm GYROLOK®	0.35	—	**3752G3YMM**	—
6mm GYROLOK®	6mm GYROLOK®	0.35	—	**3752G6YMM**	—
8mm GYROLOK®	8mm GYROLOK®	0.35	—	**3752G8YMM**	—

3700 Series: Angle Pattern
Regulating stem tip
0.170″ (4.3mm) orifice/0.35 Cv

END CONNECTIONS		Cv	ORDER BY PART NUMBER	
INLET	OUTLET		BRASS	316 STAINLESS STEEL
⅛″ GYROLOK®	⅛″ GYROLOK®	0.35	—	**3722G2Y**
⅛″ male NPT	⅛″ male NPT	0.35	**3722M2B**	—
⅛″ female NPT	⅛″ female NPT	0.35	**3722F2B**	—
⅛″ male NPT	¼″ GYROLOK®	0.35	**3722H24B**	—
¼″ GYROLOK®	¼″ GYROLOK®	0.35	—	**3722G4Y**
¼″ male NPT	¼″ GYROLOK®	0.35	**3722H4B**	**3722H4Y**
¼″ male NPT	¼″ male NPT	0.35	**3722M4B**	**3722M4Y**
6mm GYROLOK®	6mm GYROLOK®	0.35	—	**3722G6YMM**

3722G4B: Angle pattern

3700, 3800, 3900 Series

How to Order: Standard Valves

3700 Series: Angle Pattern
PCTFE stem tip
0.170″ (4.3mm) orifice/0.35 Cv

END CONNECTIONS		Cv	ORDER BY PART NUMBER	
INLET	OUTLET		BRASS	316 STAINLESS STEEL
¼″ GYROLOK®	¼″ GYROLOK®	0.35	—	**3762G4Y**
¼″ male NPT	¼″ GYROLOK®	0.35	**3762H4B**	**3762H4Y**
¼″ male NPT	¼″ male NPT	0.35	**3762M4B**	**3762M4Y**
6mm GYROLOK®	6mm GYROLOK®	0.35	—	**3762G6YMM**

3812F4Y: Globe pattern with D-style panel mounting

3800 Series: Globe Pattern
Regulating stem tip
0.219″ (5.6mm) orifice/0.55 Cv

END CONNECTIONS		Cv	ORDER BY PART NUMBER		
INLET	OUTLET		BRASS	316 STAINLESS STEEL	MONEL®
¼″ male NPT	¼″ female NPT	0.55	**3812L4B**	**3812L4Y**	—
¼″ female NPT	¼″ female NPT	0.55	**3812F4B**	**3812F4Y**	—
¼″ male NPT	⅜″ GYROLOK®	0.55	**3812H46B**	**3812H46Y**	**3812H46M**
⅜″ GYROLOK®	⅜″ GYROLOK®	0.55	**3812G6B**	**3812G6Y**	**3812G6M**
⅜″ male NPT	⅜″ male NPT	0.55	**3812M6B**	**3812M6Y**	—
½″ GYROLOK®	½″ GYROLOK®	0.55	**3812G8B**	**3812G8Y**	**3812G8M**
10mm GYROLOK®	10mm GYROLOK®	0.55	—	**3812G10YMM**	—
12mm GYROLOK®	12mm GYROLOK®	0.55	—	**3812G12YMM**	—

3800 Series: Globe Pattern
Vee-point stem tip
0.219″ (5.6mm) orifice/0.55 Cv

END CONNECTIONS		Cv	ORDER BY PART NUMBER	
INLET	OUTLET		BRASS	316 STAINLESS STEEL
⅜″ GYROLOK®	⅜″ GYROLOK®	0.55	**3842G6B**	**3842G6Y**
½″ GYROLOK®	½″ GYROLOK®	0.55	**3842G8B**	**3842G8Y**

3862L4Y: Angle pattern

3800 Series: Globe Pattern
PCTFE stem tip
0.170″ (4.3mm) orifice/0.35 Cv

END CONNECTIONS		Cv	ORDER BY PART NUMBER	
INLET	OUTLET		BRASS	316 STAINLESS STEEL
¼″ male NPT	¼″ female NPT	0.35	—	**3852L4Y**
¼″ female NPT	¼″ female NPT	0.35	**3852F4B**	**3852F4Y**
⅜″ GYROLOK®	⅜″ GYROLOK®	0.35	—	**3852G6Y**
⅜″ male NPT	⅜″ male NPT	0.35	—	**3852M6Y**
½″ GYROLOK®	½″ GYROLOK®	0.35	—	**3852G8Y**
10mm GYROLOK®	10mm GYROLOK®	0.35	—	**3852G10YMM**
12mm GYROLOK®	12mm GYROLOK®	0.35	—	**3852G12YMM**

3800 Series: Angle Pattern
Regulating stem tip
0.170″ (4.3mm) orifice/0.55 Cv

END CONNECTIONS		Cv	ORDER BY PART NUMBER	
INLET	OUTLET		BRASS	316 STAINLESS STEEL
¼″ male NPT	¼″ female NPT	0.55	—	**3802L4Y**
¼″ female NPT	¼″ female NPT	0.55	**3802F4B**	**3802F4Y**
⅜″ male NPT	¼″ female NPT	0.55	—	**3802L64Y**

3800 Series: Angle Pattern
PCTFE stem tip
0.170″ (4.3mm) orifice/0.35 Cv

END CONNECTIONS		Cv	ORDER BY PART NUMBER	
INLET	OUTLET		BRASS	316 STAINLESS STEEL
¼″ male NPT	¼″ female NPT	0.35	—	**3862L4Y**
¼″ female NPT	¼″ female NPT	0.35	**3862F4B**	**3862F4Y**
⅜″ male NPT	¼″ female NPT	0.35	—	**3862L64Y**

3700, 3800, 3900 Series

How to Order: Standard Valves

3900 Series: Globe Pattern*
Regulating stem tip
0.312″ (7.9mm) orifice/1.1 Cv

END CONNECTIONS		Cv	ORDER BY PART NUMBER		
INLET	OUTLET		BRASS	316 STAINLESS STEEL	CARBON STEEL
½″ GYROLOK®	½″ GYROLOK®	1.1	—	**3912G8Y**	—
½″ female NPT	½″ female NPT	1.1	**3912F8B**	**3912F8Y**	**3912F8E**

* *3912 series only available with metal handle*

3900 Series: Globe Pattern
PCTFE stem tip
0.312″ (7.9mm) orifice/1.1 Cv

END CONNECTIONS		Cv	ORDER BY PART NUMBER		
INLET	OUTLET		BRASS	316 STAINLESS STEEL	CARBON STEEL
½″ GYROLOK®	½″ GYROLOK®	1.1	—	**3952G8Y**	—
½″ female NPT	½″ female NPT	1.1	**3952F8B**	**3952F8Y**	**3952F8E**

3952F8Y: Globe pattern

Ordering Options

Handle Options*
To order a plug button, specify a part number from below.

COLOR	3712, 3722, 3732, 3742, 3752, 3762, 3802, 3852, 3862 SERIES	3812, 3842, 3952 SERIES
Red	**94312–002**	**94349–002**
Green	**94312–003**	**94349–003**
Yellow	**94312–004**	**94349–004**
Orange	**94312–005**	**94349–005**
Brown	**94312–006**	**94349–006**
Blue	**94312–007**	**94349–007**

* *3912 series is not available with plug button*

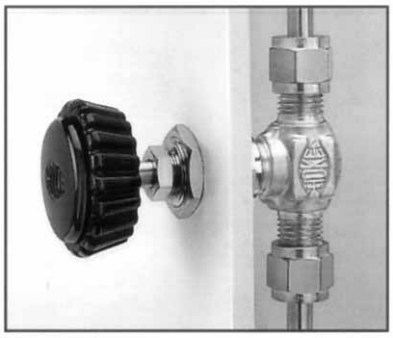
D-style panel mounting

O-ring Packing
O-ring packing is available for all 3700 and 3800 Series valves. For Buna-N o-ring packing, specify kit number **3700K1**. For Viton® o-ring packing, specify kit number **3700K2**. For additional o-ring options, contact your local HOKE® distributor.

Panel Mounting
3700 & 3800 Series
D-style: HOKE®'s factory-installed panel mounting permits valve installation without disrupting the packing. In addition, future packing adjustments may be performed while the valve is mounted. Factory-installed panel mount D-style is available for all models except the 3732 Series (globe pattern, vee-point stem). To order, add a 'D' prefix to the model number (e.g., **D3712G4Y**)

P-style: Panel mounting kits may be field installed on all 3700 and 3800 Series valves (including the 3732 Series). Once the kit is in place, valves may be mounted without disrupting the packing. All future packing adjustments must be performed with the valve removed from the panel. To order, specify part number 306–86A, which contains one kit.


P-style panel mounting kits

Panel mounting dimensions for 3700 & 3800 Series
Panel hole = 41⁄64″ (16.2 mm) diameter

Panel thickness = 3/16″ (4.7 mm) maximum

3900 Series
P-style panel mounting kits for field installation are available. To order, specify kit number **3900K1**

Panel mounting dimensions for 3900 Series
Panel hole = 49/64″ (19.4 mm) diameter
Panel thickness = 5/16″ (7.9 mm) maximum

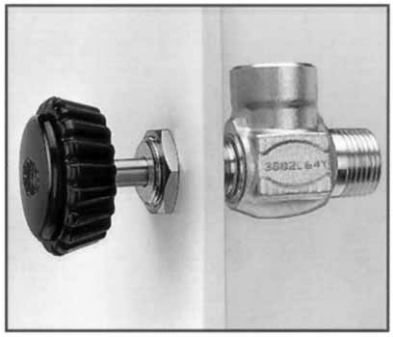

P-style panel mounting

Spare Parts
Spare parts and repair kits are available for all needle valves. Please contact your distributor for specific information.

Cleaning and Testing
When ordering, please specify if oxygen cleaning or helium leak testing is required.

Additional Sizes
Additional sizes and options are available on special request. Please consult your local HOKE® distributor.

Notes

The Small Bore Instrumentation Specialists

We specialize in small bore instrumentation products up to 2" that deliver benchmark performance quality & safety; provide the broadest array of superior alloy offerings in the market; decades of proven success in a wide range of industries; a roster of "who's who" customers & projects globally; original "Best Solution" engineering & designs; and are focused on continuous improvement in all aspects of our business.

Proudly Distributed By:

CRANE INSTRUMENTATION & SAMPLING Inc.
405 Centura Ct.
Spartanburg, SC 29305, USA

Tel: 1-864-574-7966
PO Box 4866, Spartanburg, SC 29305-4866 USA

79352ENG • 02/09/21 • APS705